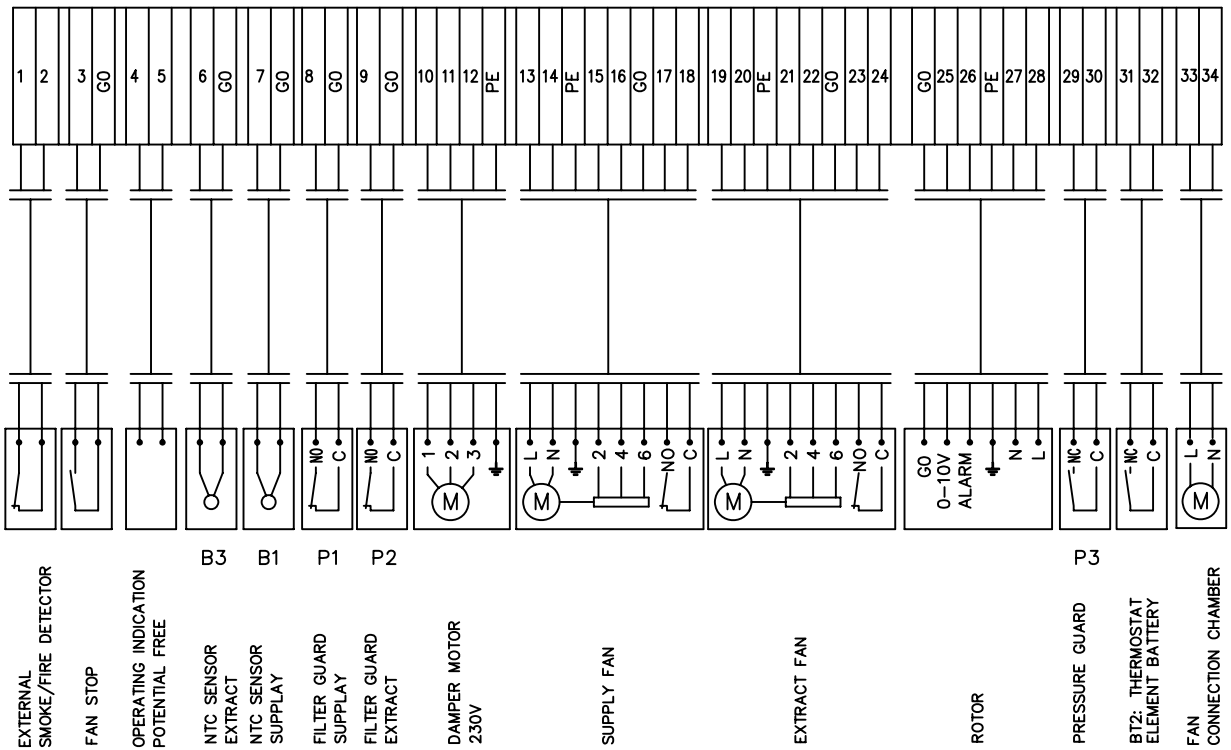

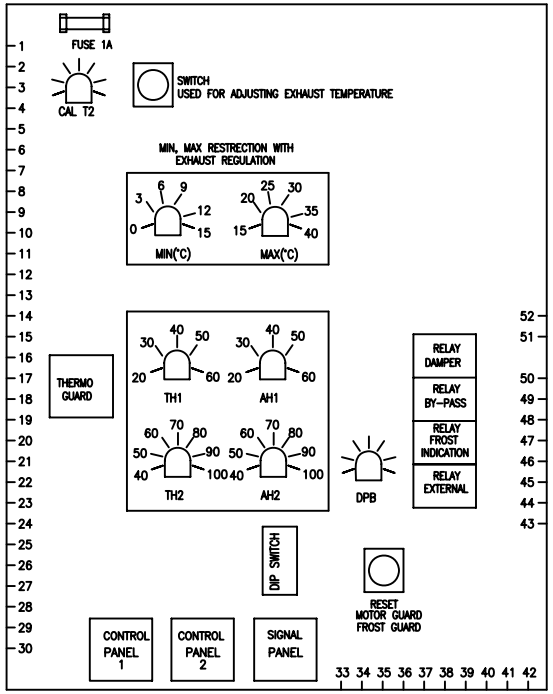

MAX(°C): MAX RESTRICTION OF INLET AIR TEMPERATURE WITH EXHAUST TEMP. REGULATION.
MIN(°C): MIN RESTRICTION OF INLET TEMPERATURE WITH EXHAUST TEMP. REGULATION.
TH1: POT.METER FOR ADJUSTING AIR SPEED 1 ON INLET FROM 20% TO 60%
AH1: POT.METER FOR ADJUSTING AIR SPEED 1 ON EXHAUST FROM 20% TO 60%
TH2: POT.METER FOR ADJUSTING AIR SPEED 2 ON INLET FROM 40% TO 100%
AH2: POT.METER FOR ADJUSTING AIR SPEED 2 ON EXHAUST FROM 40% TO 100%
CAL T2: FACTORY SETTING – POT.METER SHOULD NOT BE CHANGED TO CALIBRATE INLET SET POINT.
DPB: FACTORY SETTING – POT.METER SHOULD NOT BE CHANGED TO ADJUST SENSITIVITY OF HEATING

DIPSWITCHINSTILLINGER

	OFF	ON
1	UNIT WITH WATTER BATTERY	UNIT WITH EL. BATTERY
2	NO FUNKTION DURING NIGHT–TIME REDUCTION	FAN STOPP CONNECTION WITH NIGHT–TIME REDUCTION
3	NO FUNKTION DURING NIGHT–TIME REDUCTION	REDUCES INLET TEMP. BY 3°C AT NIGHET–TIME
4	NO FUNKTION DURING NIGHT–TIME REDUCTION	REDUCES FAN SPEED AT NIGHT–TIME
5	NO FUNKTION	FOR TEMP. CONTROLLED FAN REDUCTION
6	UNIT WITH PRE HEATING	UNIT WITH BY–PASS OR ROTOR
7	UNIT WITH ONE ELEMENT GROUP OR WATTER BATTERY	CONTROLS THE DIFFERENT ELEMENT GROUPS
8	UNIT WITH ISDN THERMO GUARD	UNIT WITH THERMO GUARD

INTERNAL WIRING, GRUNDFOS MOTOR 0.75 – 1.4KW

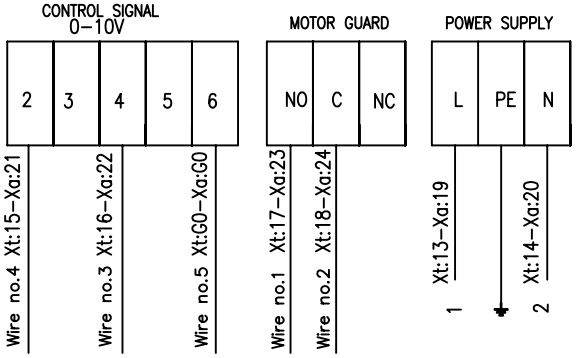

Xt= INLET MOTOR
Xa= EXHAUST MOTOR

Symb.	Changes	Date/Sign.
1	ENDRET GO	2005–08–16/LA

No. Unit	Pos. No.	Name, type, dim.	Drawing no. Standard	Art. No.	Matr. Spec.

Date	Drawn	Projection	Scale
28.10.02	T. I. Engen		
Checked	Appr.		

FLEXIT®

CONNECTOR DIAGRAM
S20/30 RE 400V

Replaces:	Replaced by:

342027 Side: 1/3

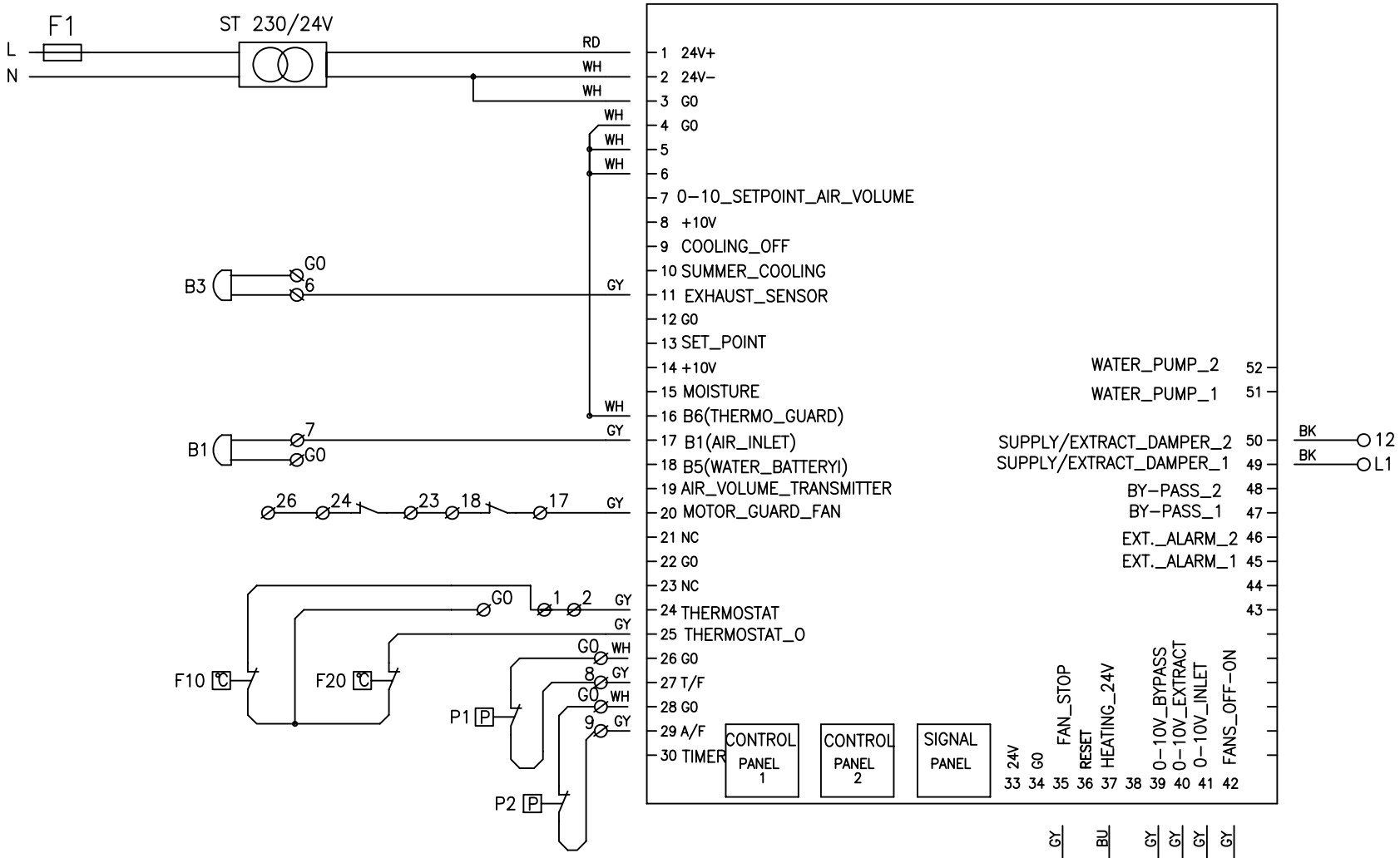

B1: Temperature sensor, supply
B3: Temperature sensor, extact
ST: Transformer 230/24V
F10: Fire termostat, man. reset
F20: Overheat termostat
P1: Filter guard, supply
P2: Filter guard, extract

COLOUR CODE – INTERNAL WIRING

L1	230V	BLACK	BK
L2	230V	BLACK	BK
24V AC (G)	LED 1+	RED	RD
ZERO (0–POINT) G0	LED 2–	WHITE	WH
24V DC	LED 1+	BLUE(DARK)	BU
ZERO (0–POINT) G0	LED 2 –	WHITE	WH
0–10V DC		GREY	GY
POT.FREE SIGNAL		GREY	GY
G0 (0–POINT) FROM TRAFO 24V–			

Symb.	Changes	Date/Sign.
1	ENDRET G0	2005–12–13/LA

No. Unit	Pos. No.	Name, type, dim.	Drawing no. Standard	Art. No.	Matr. Spec.

Date 28.10.02 | Drawn T. I. Engen | Projection | Scale | FLEXIT®

Checked | Appr.

CONNECTIONS CONTROL BOARD
S20/30 RE 400V

Replaces: | Replaced by:

342027 | Side: 2/3

Lay-out Mountain

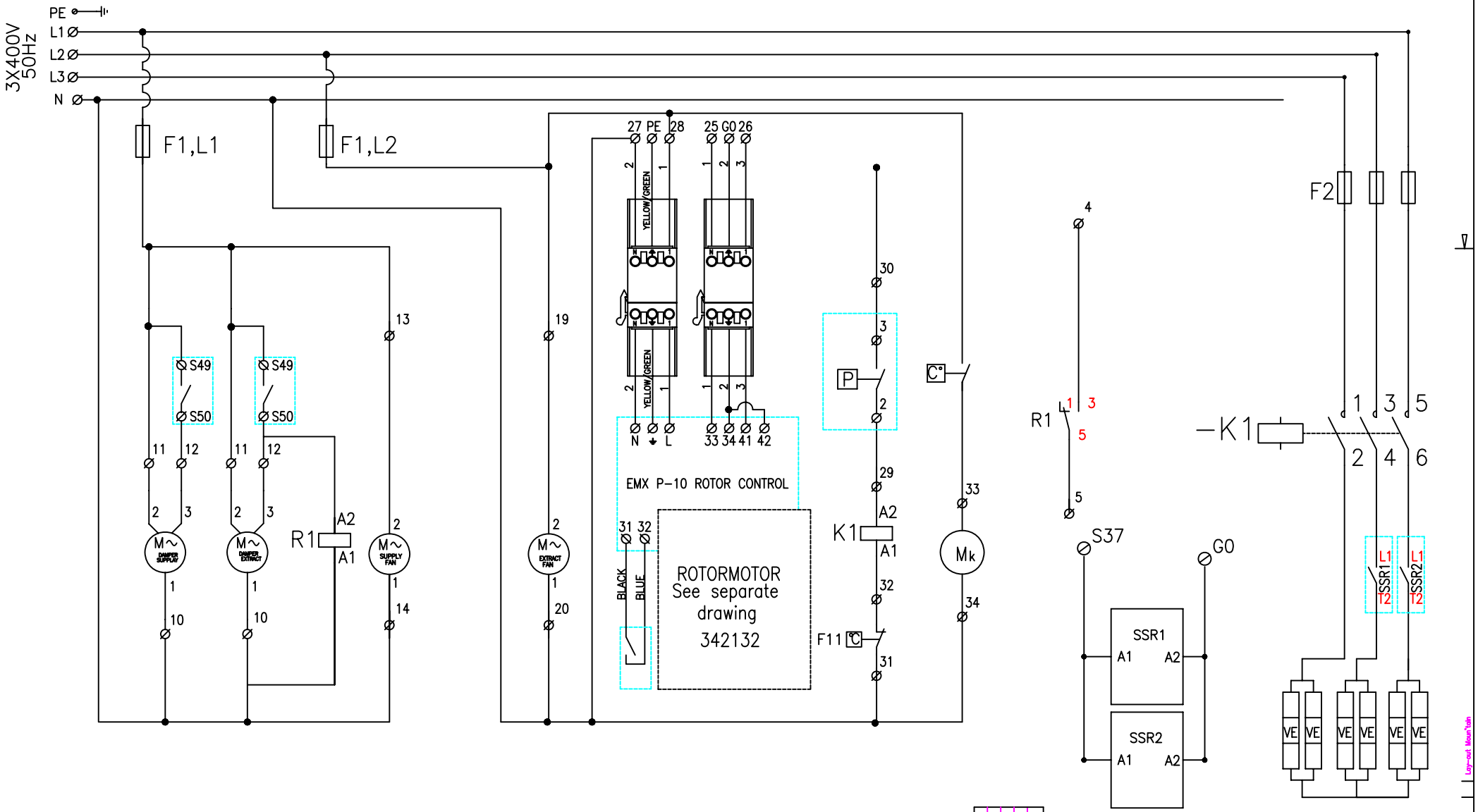

XX: MAIN TERMINAL BLOCK
SXX: TERMINAL BLOCKS ON CONTROL BOARD
F1: FUSE 2X16A
F2: FUSE 3X25A
VE: HEATING ELEMENT S20=2KW S30=2.5KW
K1: CONTACTOR, Min 45A
P: PRESSURE GUARD
F11: FIRE THERMOSTAT, MAN RESET
Mk: COOLING FAN
C°: THERMOSTAT COOLING FAN

Changes	Date/Sign.
2 ENDRET FRA SP1500	2006-09-11/LA
1 : ENDRET G0	2005-08-30/LA

No. Unit	Pos. No.	Name, type, dim.	Drawing no. Standard	Art. No.	Matr. Spec.
Date 28.10.02	Drawn T. I. Engen	Projection	Scale	FLEXIT	
Checked	Appr.				

WIRING COMPONENTS
S20/30 RE 400V

Replaces: | Replaced by:

342027 | Side: 3/3

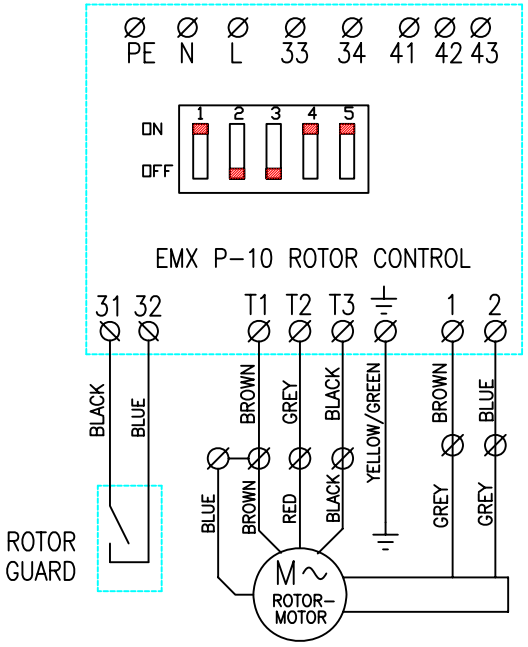

MOTORTYPE:
JAPAN SERVO IHT8PF25N-1

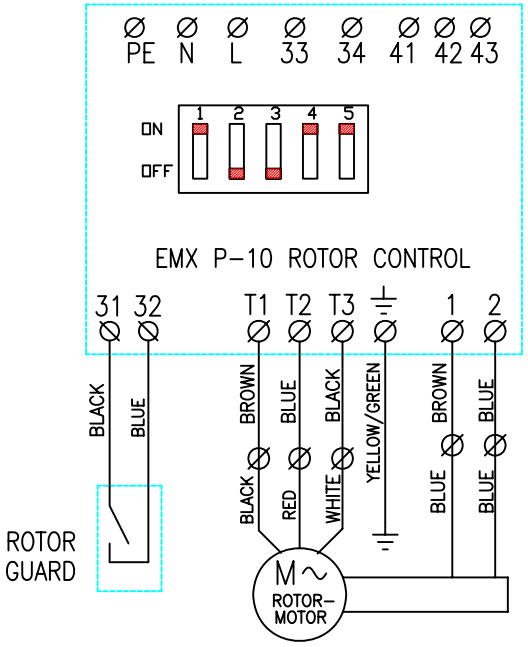

MOTORTYPE:
OM MSM 425-402M

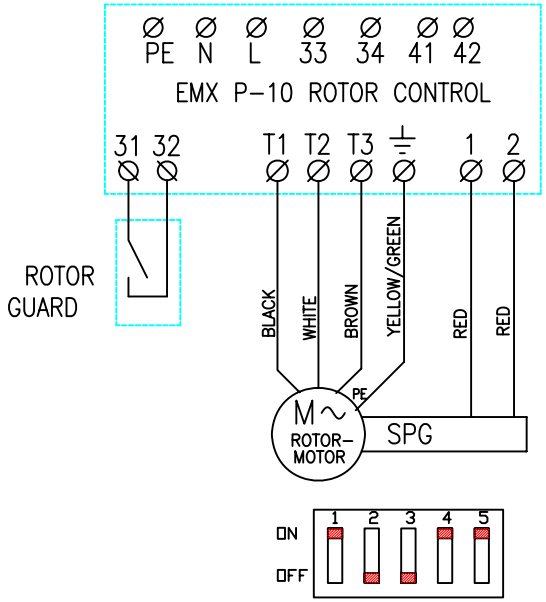

MOTORTYPE:
SPG

BRIDGE BY1 CUT OFF

Symb.	Changes	Date/Sign.
2	My rotormotor SPG	30-03-2007 TIE
1	Endret fra SP1500 rotorstyring	11-09-2006 LA

No. Unit	Pos. No.	Name, type, dim.	Drawing no. Standard	Art. No.	Matr. Spec.
Date 11.08.05	Drawn T. I. Engen	Projection	Scale	FLEXIT®	
Checked	Appr.				

CONNECTIONS ROTOR

Replaces: | Replaced by:

342132 | Page

Lay-out Mountain