EXTERNAL CONNECTIONS

INTERNAL CONNECTIONS

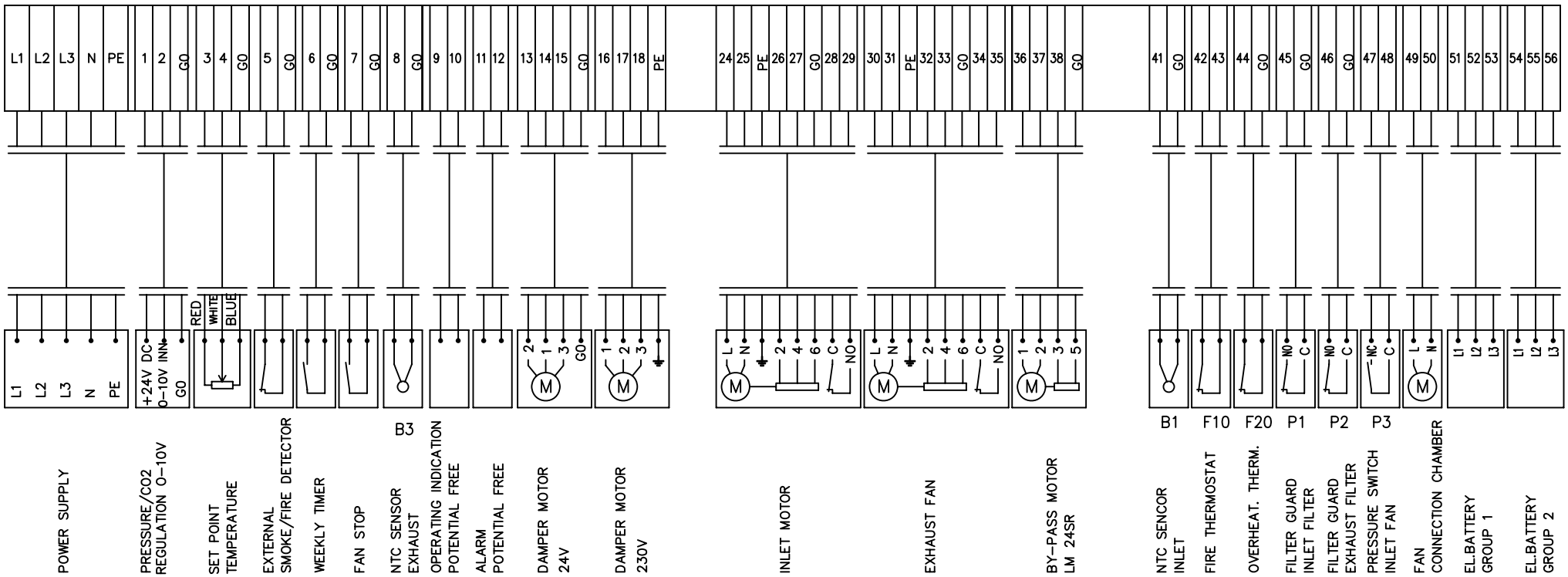

INTERNAL WIRING, GRUNDFOS MOTOR 0.75 – 1.1KW

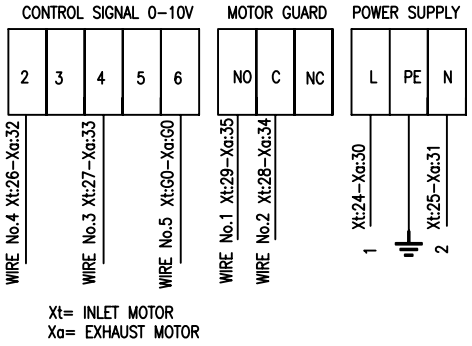

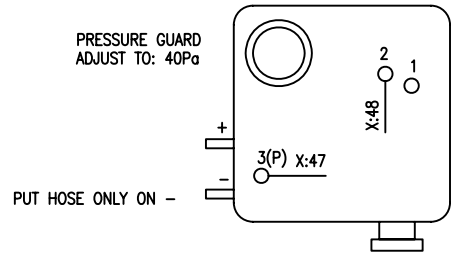

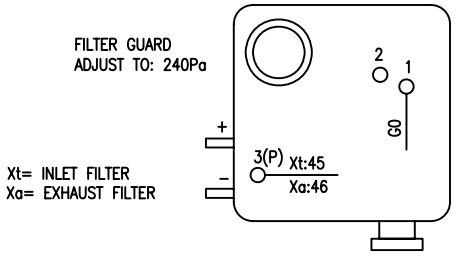

BY-PASS MOTOR LM 24SR

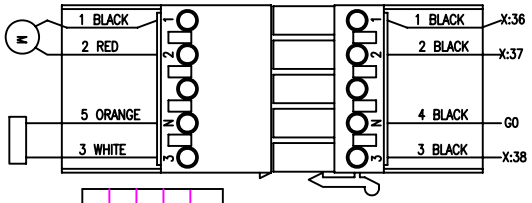

Position bypass in centre
Position motor in centre

COLOUR CODE – INTERNAL WIRING

L1	230V	BLACK	BK
L2	230V	BLACK	BK
24V AC (G)	LED 1+	RED	RD
ZERO (0-POINT) GO	LED 2–	WHITE	WH
24V DC	LED 1+	BLUE(DARK)	BU
ZERO (0-POINT) GO	LED 2 –	WHITE	WH
0–10V DC		GREY	GY
POT.FREE SIGNAL		GREY	GY
GO (0-POINT) FROM TRAFO 24V–			

Changes	Symb.	Date/Sign.
ENDRING GO	2	2005-08-11/LA
NY TYPE MOTOR	1	04.09.01/TIE

No. Unit	Pos. No.	Name, type, dim.	Drawing no. Standard	Art. No.	Matr. Spec.

Date	Drawn	Projection	Scale
06.09.00	P. Gaasvik		
Checked	Appr.		

FLEXIT®

CONNECTOR DIAGRAM
L20–L30 XE

Replaces:	Replaced by:
341671	Side: 1/3

CONTROL BOARD

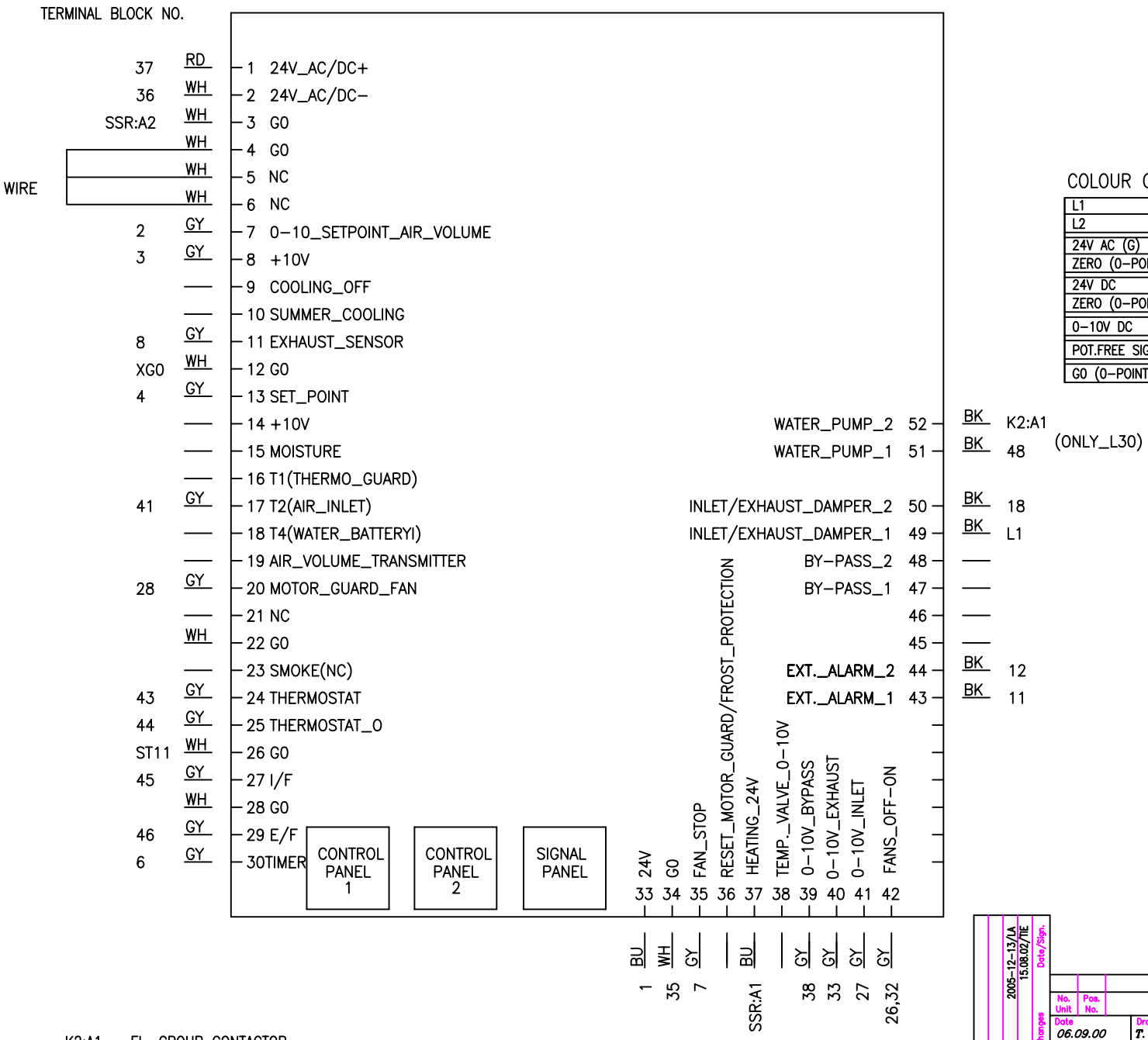

K2:A1 = EL. GROUP CONTACTOR

COLOUR CODE − INTERNAL WIRING

L1	230V	BLACK	BK
L2	230V	BLACK	BK
24V AC (G)	LED 1+	RED	RD
ZERO (0−POINT) G0	LED 2−	WHITE	WH
24V DC	LED 1+	BLUE(DARK)	BU
ZERO (0−POINT) G0	LED 2 −	WHITE	WH
0−10V DC		GREY	GY
POT.FREE SIGNAL		GREY	GY
G0 (0−POINT) FROM TRAFO 24V−			

Symb.	Changes	Date/Sign.
3	Endret G0	2005−12−13/LA
2	Endret tilkobl	15.08.02/TIE

No. Unit	Pos. No.	Name, type, dim.	Drawing no. Standard	Art. No.	Matr. Spec.

Date 06.09.00 | Drawn T. I. Engen | Projection | Scale | FLEXIT®

Checked | Appr.

CONNECTIONS CONTROL BOARD
L20−L30 XE

Replaces: | Replaced by:

341671 | Side: 2/3

Lay-out Mountain

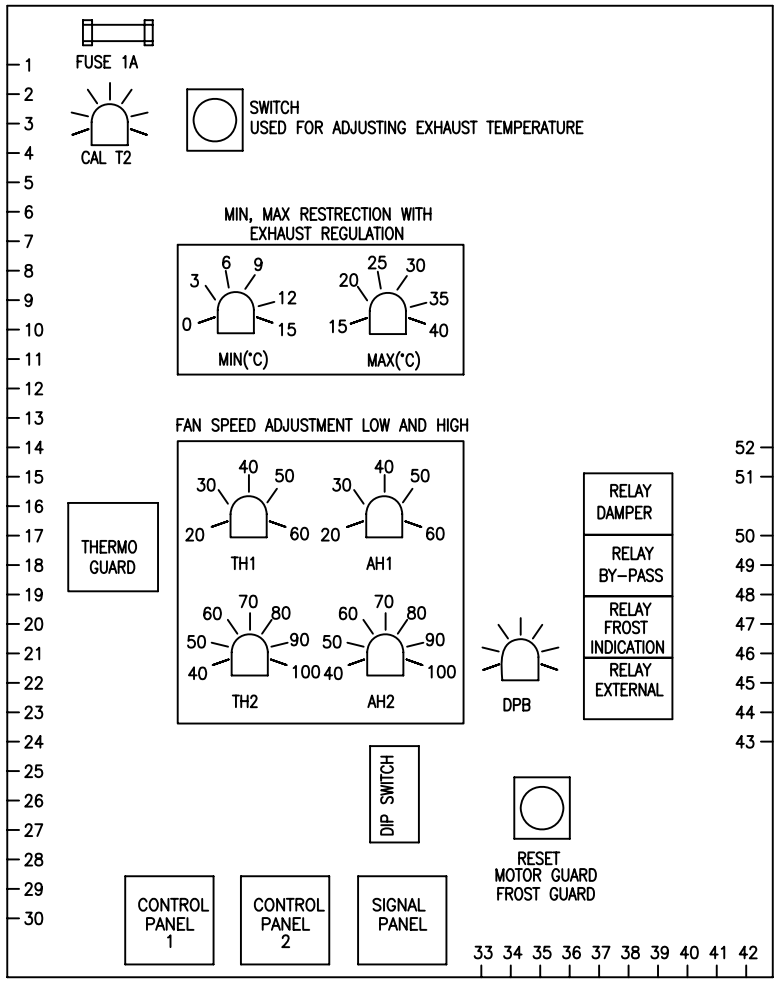

MAX(°C): MAX RESTRICTION OF INLET AIR TEMPERATURE WITH EXHAUST TEMP. REGULATION.
MIN(°C): MIN RESTRICTION OF INLET TEMPERATURE WITH EXHAUST TEMP. REGULATION.
TH1: POT.METER FOR ADJUSTING AIR SPEED 1 ON INLET FROM 20% TO 60%
AH1: POT.METER FOR ADJUSTING AIR SPEED 1 ON EXHAUST FROM 20% TO 60%
TH2: POT.METER FOR ADJUSTING AIR SPEED 2 ON INLET FROM 40% TO 100%
AH2: POT.METER FOR ADJUSTING AIR SPEED 2 ON EXHAUST FROM 40% TO 100%
CAL T2: FACTORY SETTING – POT.METER SHOULD NOT BE CHANGED TO CALIBRATE INLET SET POINT.
DPB: FACTORY SETTING – POT.METER SHOULD NOT BE CHANGED TO ADJUST SENSITIVITY OF HEATING

DIP SWITCH: SWITCH FOR SPECIAL FUNCTIONS

1: WHEN WATER BATTERY:OFF. WHEN ELECTRIC BATTERY:ON
2: FAN STOP IN CONNECTION WITH NIGHT–TIME REDUCTION
MUST THEN BE IN ON POSITION
3: REDUCES THE INCOMING AIR TEMPERATURE BY 3°C AT NIGHT– TIME
MUST THEN BE IN ON POSITION
4: REDUCES FAN SPEED AT NIGHT–TIME
MUST THEN BE IN ON POSITION
5: FOR TEMPERATURE CONTROLLED FAN REDUCTION IN THE "ON" POSITION
6: BY–PASS AFFECTED BY RESIDUAL HEAT
MUST BE IN THE "ON"POSITION
7: CONTROLS THE DIFFERENT ELEMENT GROUPS
MUST BE IN THE "ON" POSITION ON L30, AND IN THE "OFF" POSITION ON L20
8: THERMO GUARD
IF ISDN CONNECTION, MUST BE IN THE "OFF" POSITION

Lay-out Mountain

Date/Sign.
Changes
Symb.

No. Unit	Pos. No.	Name, type, dim.	Drawing no. Standard	Art. No.	Matr. Spec.
Date 06.09.00		Drawn T. I. Engen	Projection	Scale	FLEXIT
Checked		Appr.			

CONTROL BOARD
L20–L30 XE

Replaces: | Replaced by:

341671 | Side: 3/3

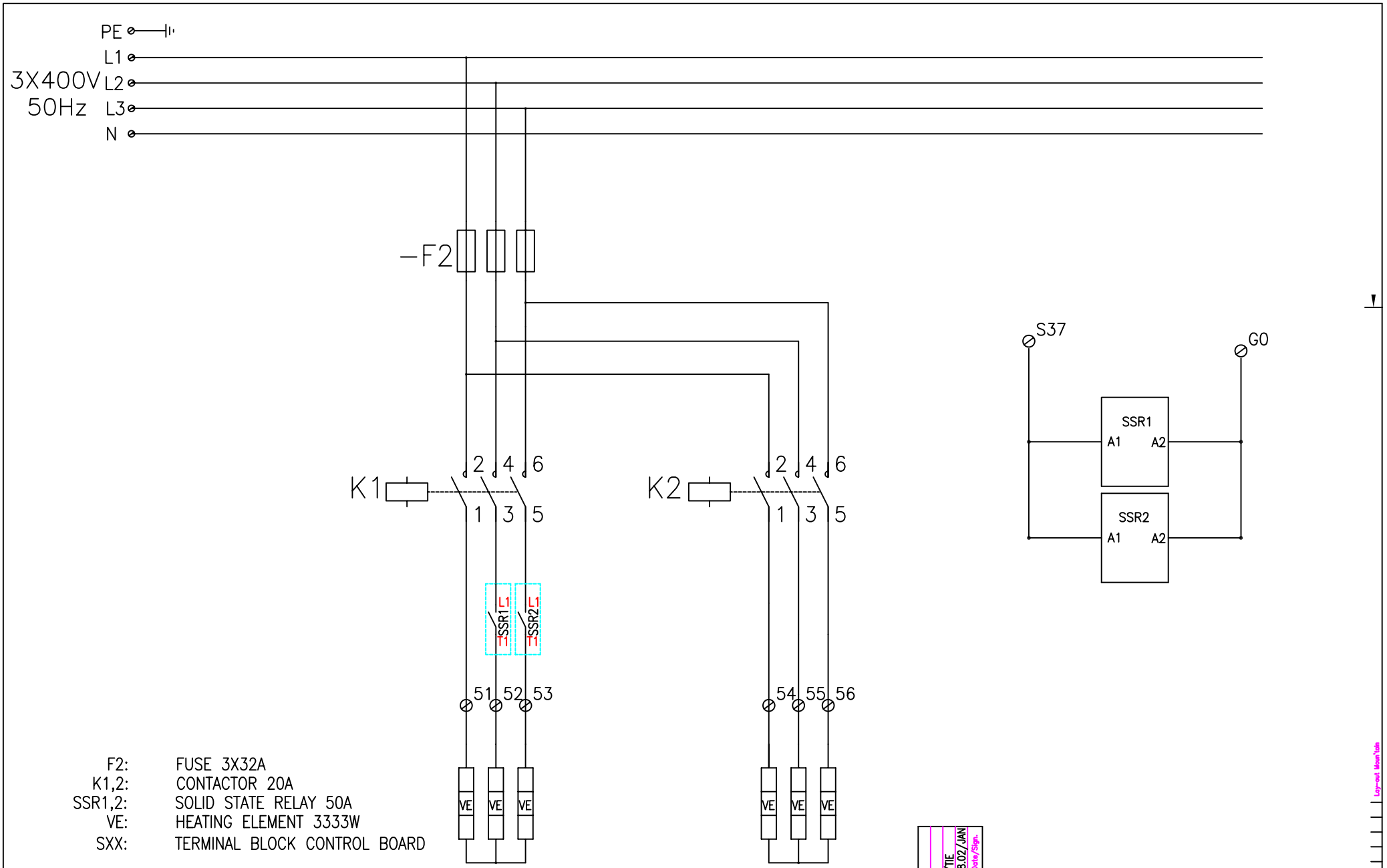

F2: FUSE 3X32A
K1,2: CONTACTOR 20A
SSR1,2: SOLID STATE RELAY 50A
VE: HEATING ELEMENT 3333W
SXX: TERMINAL BLOCK CONTROL BOARD

1: GND TIL GO 30.03.05/TIE
1: ENDRET TEGNING 16.08.02/JAN
Changes Symb. Date/Sign.

No. Unit	Pos. No.	Name, type, dim.	Drawing no. Standard	Art. No.	Matr. Spec.
Date 06.09.00	Drawn T. I. Engen	Projection	Scale	FLEXIT	
Checked	Appr.				

CONNECTION HEATER
21kW-400V

Replaces: | Replaced by:

341675 | Side: 1/2

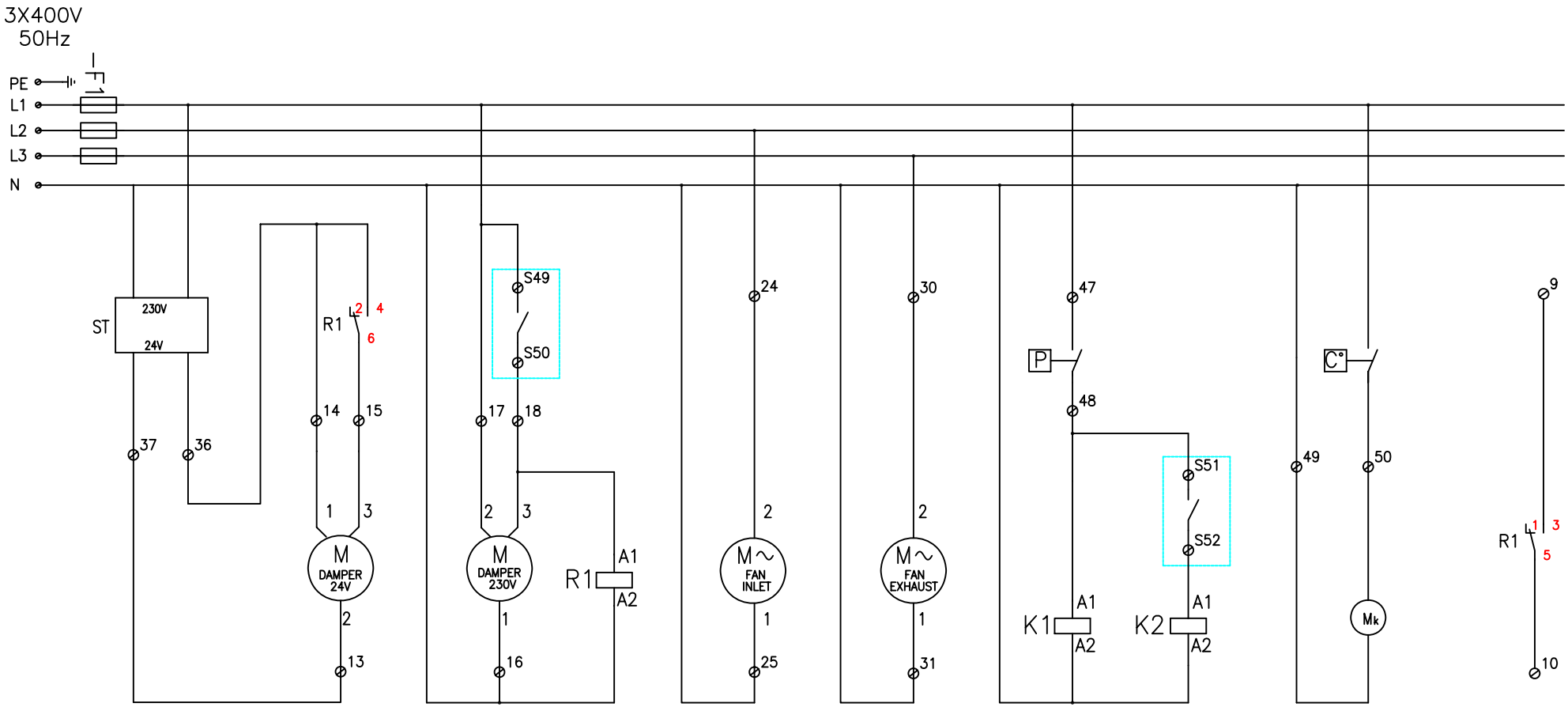

SXX: TERMINAL BLOCK ON CONTROL BOARD
F1: FUSE 3X16A
ST: TRANSFORMER 230V TIL 24V
BT2: THERMOSTAT IN EL.BOX
R1: RELAY FINDER 56.32 12A 250V
K1,2: CONTACTOR 20A
Mk: COOLING FAN IN EL.BOX

Symb.	Changes	Date/Sign.
2	ENDRING GO	2005-09-28/LA
1	ENDRET TEGNING	16.08.02/JAN

No. Unit	Pos. No.	Name, type, dim.	Drawing no. Standard	Art. No.	Matr. Spec.
Date: 06.09.00		Drawn: T. I. Engen	Projection	Scale	
Checked		Appr.			

FLEXIT®

WIRING COMPONENTS
L30 400V

Replaces:	Replaced by:
341675	Side: 2/2