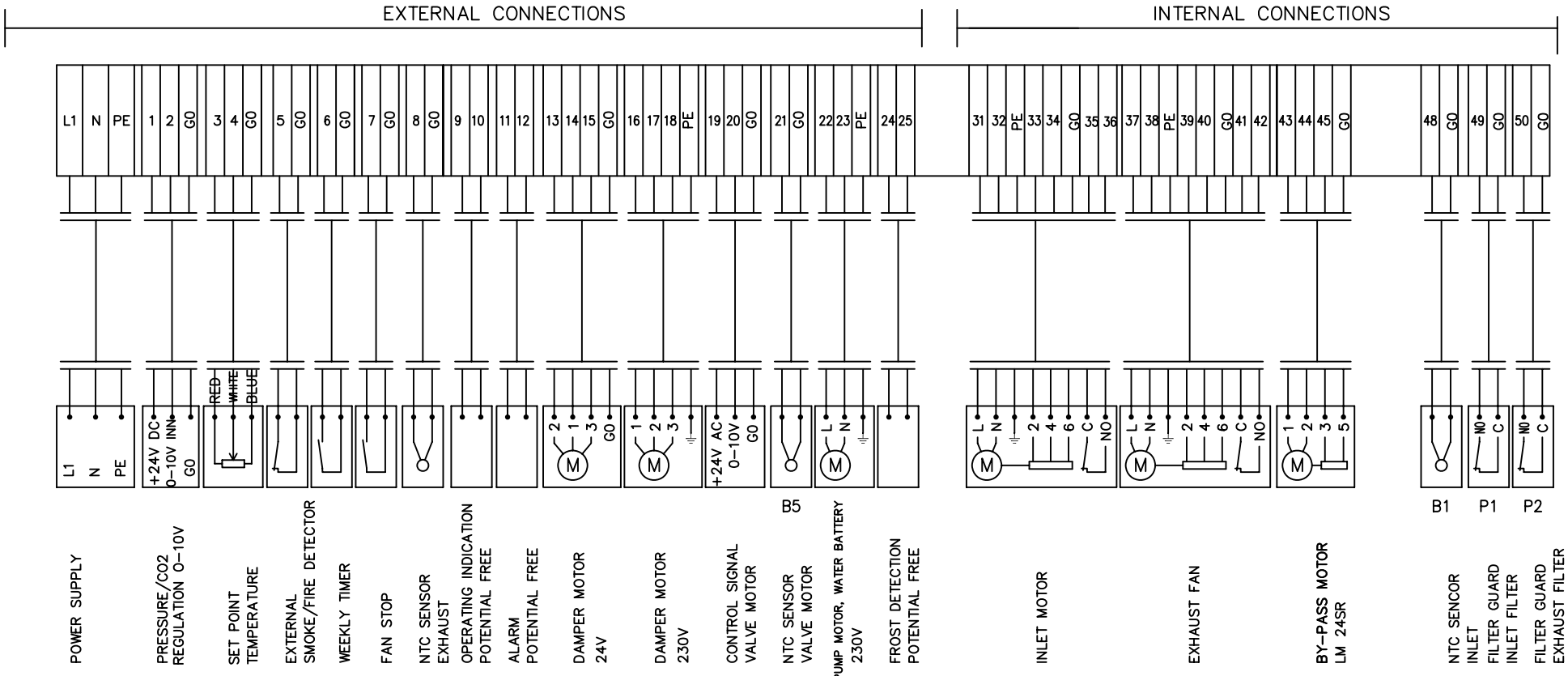

INTERNAL WIRING, GRUNDFOS MOTOR 0.75 – 1.1KW

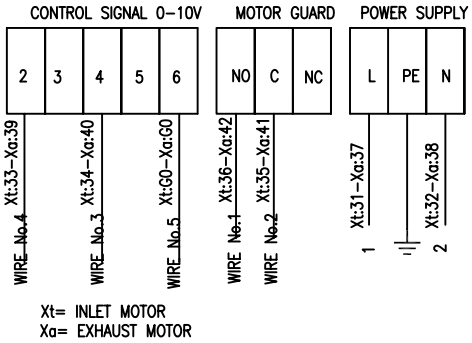

Xt= INLET MOTOR
Xa= EXHAUST MOTOR

WATER VALVE

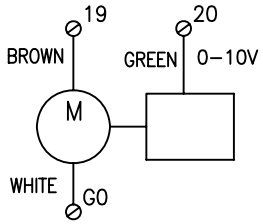

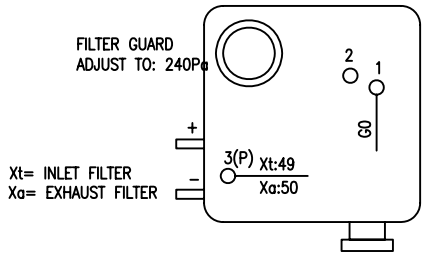

Xt= INLET FILTER
Xa= EXHAUST FILTER

BY-PASS MOTOR LM 24SR

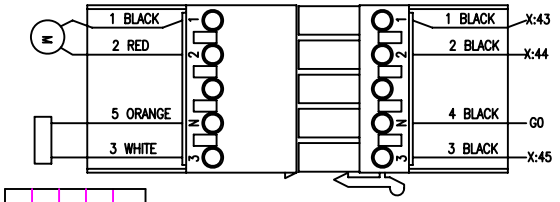

Position bypass in centre
Position motor in centre

COLOUR CODE – INTERNAL WIRING

L1	230V	BLACK	BK
L2	230V	BLACK	BK
24V AC (G)	LED 1+	RED	RD
ZERO (0-POINT) GO	LED 2–	WHITE	WH
24V DC	LED 1+	BLUE(DARK)	BU
ZERO (0-POINT) GO	LED 2 –	WHITE	WH
0-10V DC		GREY	GY
POT.FREE SIGNAL		GREY	GY
GO (0-POINT) FROM TRAFO 24V–			

Symb.	Changes	Date/Sign.
2	ENDRING GO	2005-08-16/LA
1	NY MGE MOTOR	05.09.01/TIE

No. Unit	Pos. No.	Name, type, dim.	Drawing no. Standard	Art. No.	Matr. Spec.

Date	Drawn	Projection	Scale
07.09.00	T. I. Engen		
Checked	Appr.		

FLEXIT®

CONNECTOR DIAGRAM
L20–L30 XW

Replaces:	Replaced by:
341676	Side: 1/4

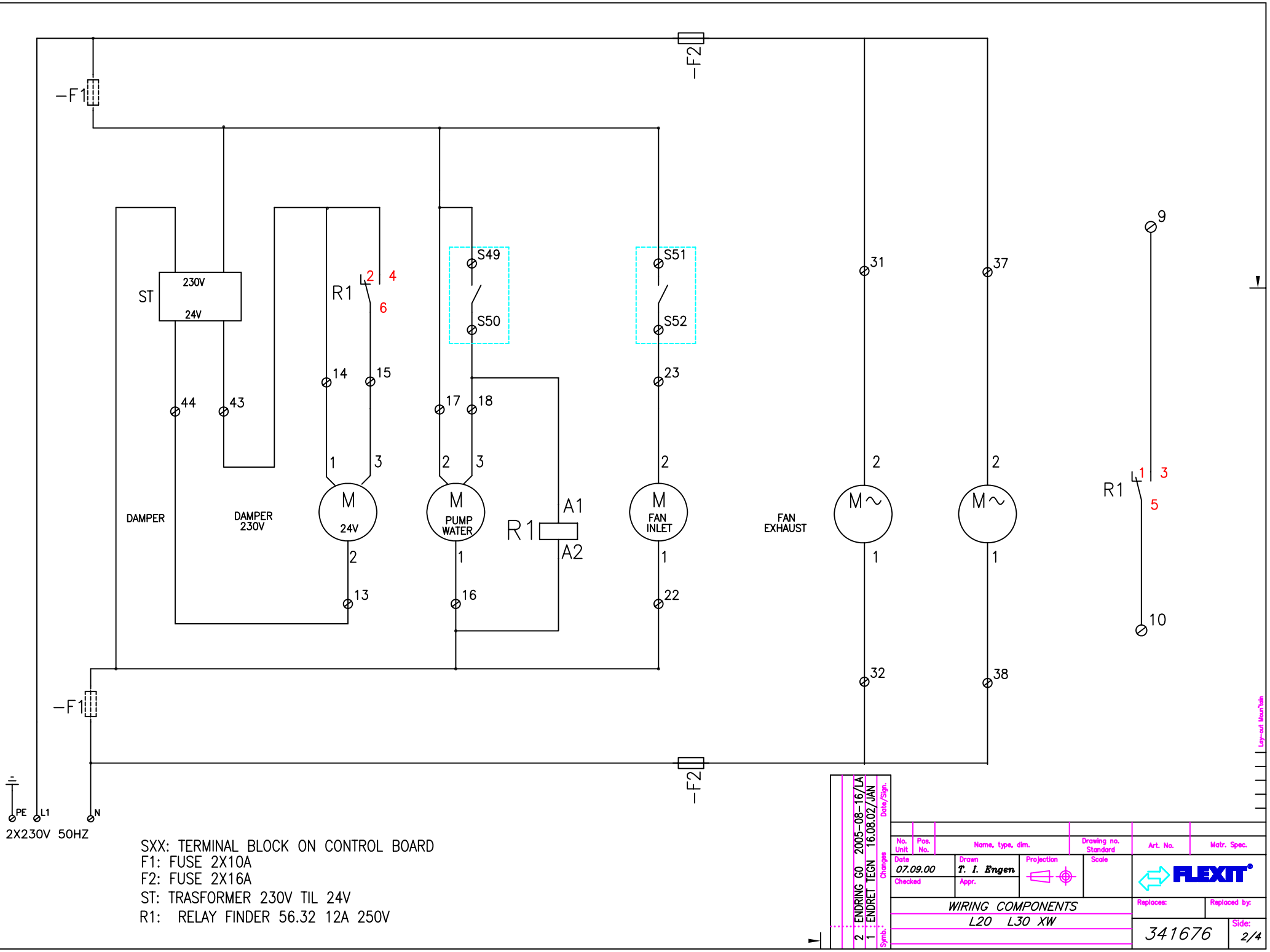

SXX: TERMINAL BLOCK ON CONTROL BOARD
F1: FUSE 2X10A
F2: FUSE 2X16A
ST: TRASFORMER 230V TIL 24V
R1: RELAY FINDER 56.32 12A 250V

Changes	Date/Sign.
2 ENDRING GO	2005-08-16/LA
1 ENDRET TEGN	16.08.02/JAN

No. Unit	Pos. No.	Name, type, dim.	Drawing no. Standard	Art. No.	Matr. Spec.
Date 07.09.00	Drawn T. I. Engen	Projection	Scale	FLEXIT	
Checked	Appr.			Replaces:	Replaced by:
WIRING COMPONENTS L20 L30 XW				341676	Side: 2/4

CONTROL BOARD

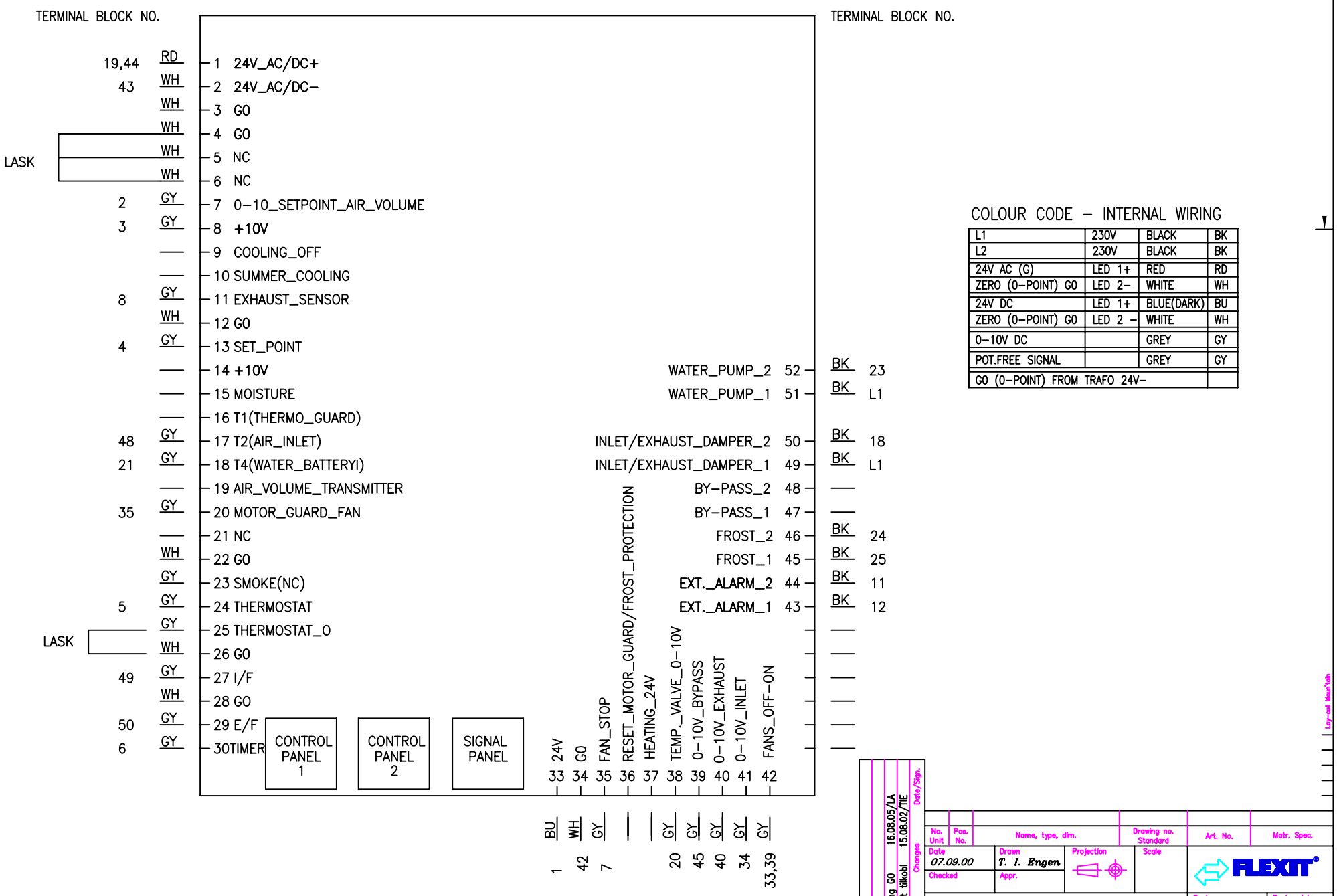

COLOUR CODE – INTERNAL WIRING

L1	230V	BLACK	BK
L2	230V	BLACK	BK
24V AC (G)	LED 1+	RED	RD
ZERO (0–POINT) G0	LED 2–	WHITE	WH
24V DC	LED 1+	BLUE(DARK)	BU
ZERO (0–POINT) G0	LED 2 –	WHITE	WH
0–10V DC		GREY	GY
POT.FREE SIGNAL		GREY	GY
G0 (0–POINT) FROM TRAFO 24V–			

Changes: 3 Endring G0 16.08.05/LA; 2 Endret tilkobl 15.08.02/TIE

No. Unit	Pos. No.	Name, type, dim.	Drawing no. Standard	Art. No.	Matr. Spec.
Date 07.09.00	Drawn T. I. Engen	Projection	Scale		
Checked	Appr.				

CONNECTIONS CONTROL BOARD
L20–L30 XW

FLEXIT

Replaces: | Replaced by:

341676 | Side: 3/4

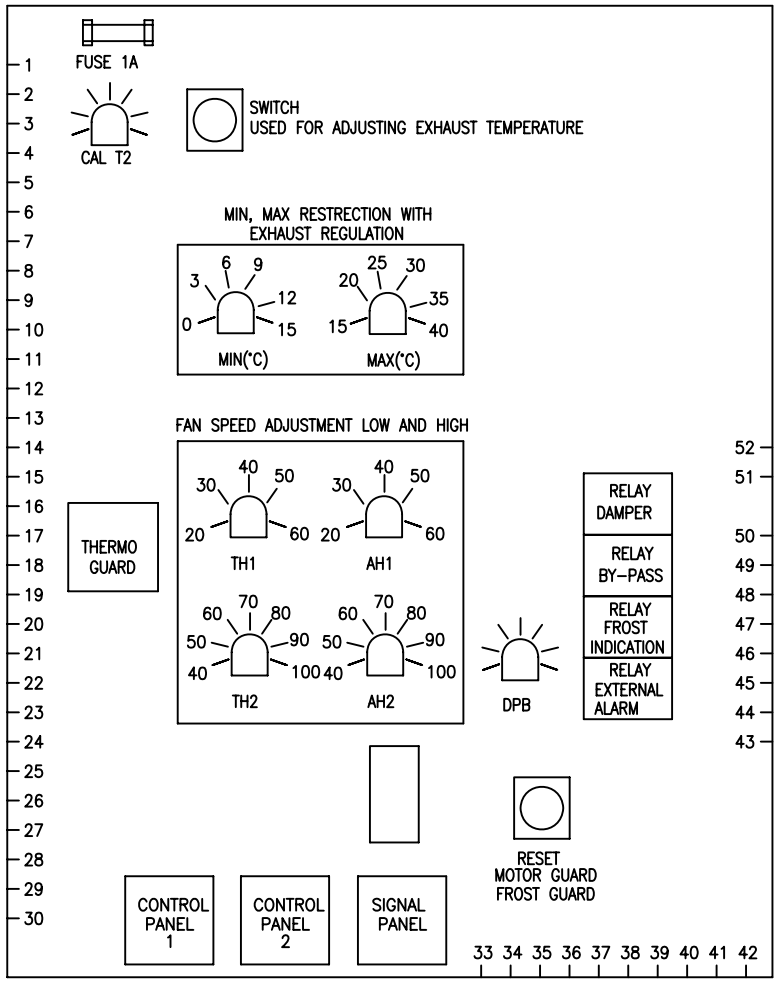

MAX(°C): MAX RESTRICTION OF INLET AIR TEMPERATURE WITH EXHAUST TEMP. REGULATION.
MIN(°C): MIN RESTRICTION OF INLET TEMPERATURE WITH EXHAUST TEMP. REGULATION.
TH1: POT.METER FOR ADJUSTING AIR SPEED 1 ON INLET FROM 20% TO 60%
AH1: POT.METER FOR ADJUSTING AIR SPEED 1 ON EXHAUST FROM 20% TO 60%
TH2: POT.METER FOR ADJUSTING AIR SPEED 2 ON INLET FROM 40% TO 100%
AH2: POT.METER FOR ADJUSTING AIR SPEED 2 ON EXHAUST FROM 40% TO 100%
CAL T2: FACTORY SETTING – POT.METER SHOULD NOT BE CHANGED TO CALIBRATE INLET SET POINT.
DPB: FACTORY SETTING – POT.METER SHOULD NOT BE CHANGED TO ADJUST SENSITIVITY OF HEATING

DIP SWITCH: SWITCH FOR SPECIAL FUNCTIONS

1: WHEN WATER BATTERY:OFF. WHEN ELECTRIC BATTEY:ON
2: FAN STOP IN CONNECTION WITH NIGHT–TIME REDUCTION
MUST THEN BE IN ON POSITION
3: REDUCES THE INCOMING AIR TEMPERATURE BY 3°C AT NIGHT– TIME
MUST THEN BE IN ON POSITION
4: REDUCES FAN SPEED AT NIGHT–TIME
MUST THEN BE IN ON POSITION
5: FOR TEMPERATURE CONTROLLED FAN REDUCTION IN THE "ON" POSITION
6: BY–PASS AFFECTED BY RESIDUAL HEAT
MUST BE IN THE "ON"POSITION
7: CONTROLS THE DIFFERENT ELEMENT GROUPS
MUST BE IN THE "ON" POSITION ON L30, AND IN THE "OFF" POSITION ON L20
8: THERMO GUARD
IF ISDN CONNECTION, MUST BE IN THE "OFF" POSITION

No. Unit	Pos. No.	Name, type, dim.	Drawing no. Standard	Art. No.	Matr. Spec.

Date 07.09.00 | Drawn T. I. Engen | Projection | Scale | FLEXIT
Checked | Appr.

FUNCTIONS ON CONTROL BOARD
L20–L30 XW

Replaces: | Replaced by:
341676 | Side: 4/4

Changes | Date/Sign. | Symb.