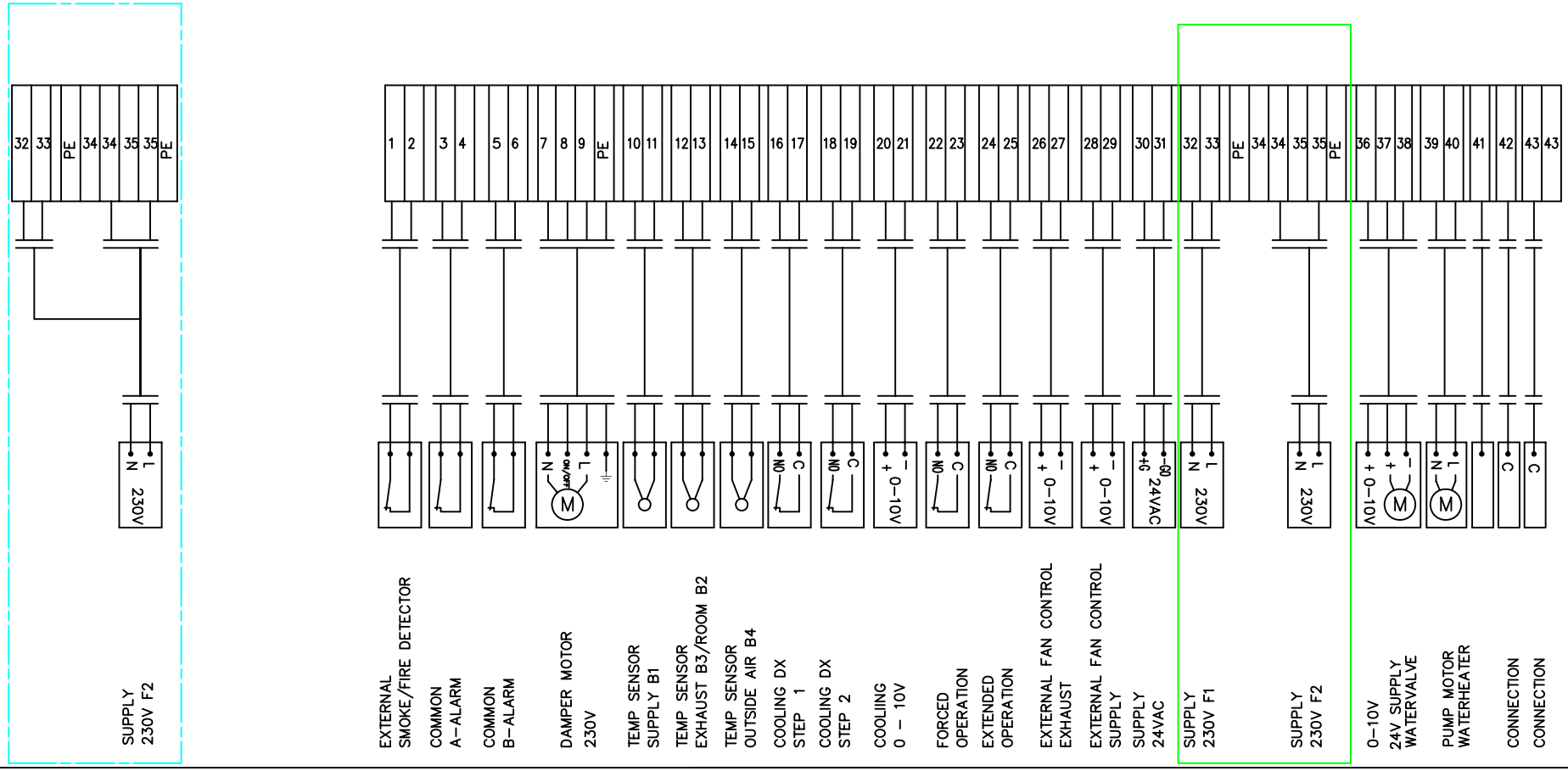

CONNECTION DAMPER

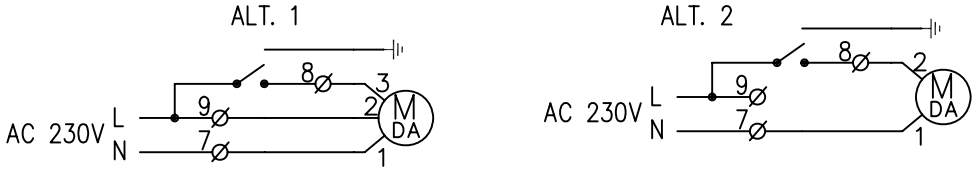

Symb.	Changes	Date/Sign.
2	TEGNING ENDRET 2007-10-25/LA	
1	TEGNING ENDRET 2005-08-23/LA	

No. Unit	Pos. No.	Name, type, dim.	Drawing no. Standard	Art. No.	Matr. Spec.
Date 10.02.04	Drawn T. I. Engen	Projection	Scale	FLEXIT®	
Checked	Appr.				

CONNECTOR DIAGRAM CS1000
WATER HEATER
ART.NO.:93511

Replaces:	Replaced by:
342076	Side:

CONNECTIONS TERMINAL AND COMPONENTS

CS1000 IO	Function	IO type	Connection CS1000	Connection components
Relay outputs				
DO1	Pump (water battery)/ Heat stage2 (electric battery)	Digital	X3 (Pin 1,2)	X:35, X:40 X:41, K2-A1
DO2	Heat stage3 (electric battery)	Digital	X3 (Pin 4,5)	
DO3	Fan start/stop-internal	Digital	X4 (Pin 1,2)	X:43, G0 *
DO4	Outdoor air damper	Digital	X4 (Pin 4,5)	X:8, X:35
DO5	Cooling dx stage1	Digital	X5 (Pin 1,2)	X:16, X:17
DO6	Cooling dx stage2	Digital	X5 (Pin 4,5)	X:18, X:19
DO7	Alarm output priority A	Digital	X6 (Pin 1,2)	X:3, X:4
DO8	Alarm output priority B	Digital	X6 (Pin 4,5)	X:5, X:6
Analog outputs				
AO1	Cooling	Analog (0 - 10V)	X9 (Pin 1,3)	X:20, G0
AO2	Heating FULL Range water battery	Analog (0 - 10V)	X9 (Pin 2,3)	X:36, G0
AO3	Pulse width Modulating 0 or 10V (ON/OFF)	Analog (0/10VDC)	X9 (Pin 4,6)	X:SSR1-2 A1, G0
AO4	Rotor (Heat/Cool Recovery) or Damper	Analog (0 - 10 V)	X9 (Pin 5,6)	SP1500(X:33), G0 Damper led.3, G0
AO5	Supply air fan. Freq. Conv.	Analog (0 - 10 V)	X10 (Pin 1,3)	FanSup X:4, G0 **
AO6	Extract air fan Freq. Conv.	Analog (0 - 10 V)	X10 (Pin 2,3)	FanExt X:4, G0 **
AO7	Air volume indication extract air	Analog (0 – 10 V)	X10 (Pin 4,6)	
AO8	Air volume indication supply air	Analog (0 – 10 V)	X10 (Pin 5,6)	
Binary inputs				
DI1	Plate heat exchanger: Overheating thermostat With rotor: Rotor alarm	Digital	X7 (Pin 1,2)	Thermostat F20 SP1500X:42,SP1500X:43
DI2	Alarm external fire/smoke	Digital	X7 (Pin 3,4)	X:1, X:2
DI3	Alarm fan supply/extract	Digital	X8 (Pin1,2)	FanExt X:NO, FanSup X:NO***
DI4	External start/stop	Digital	X8 (Pin 3,4)	
Universal inputs				
UI1	Extract/room temperature	Passive (Ni 1000)	X11 (Pin 1,2)	X:12, X:13
UI2	Supply air temperature	Passive (Ni 1000)	X11 (Pin 3,4)	X:10, X:11
UI3	Outside temperature	Passive (Ni 1000)	X11 (Pin 5,6)	X14, X:15
UI4	External sensor extract (pressure or CO2)	Analog (0 - 10 V)	X11 (Pin 7,8)	X:26, G0
UI5	External sensor supply (pressure or CO2)	Analog (0 - 10 V)	X11 (Pin 9,10)	X:28, G0
UI6	With Plate heat exchanger: Frost/ice sensor With rotor: This is Elec heater O/H	Analog	X11(Pin11,12)	Thermoguard Thermostat F20
UI7	Spare		X11(Pin13,14)	
UI8	Filter guard supply air	Analog (0 – 10 V)	X12 (Pin 1,2)	Filterguard P1, G0
UI9	Filter guard extract air	Analog (0 – 10 V)	X12 (Pin 3,4)	Filterguard P2, G0
UI10	Input internal sensor extract	Analog (0 – 10 V)	X12 (Pin 5,6)	Sensor P11, G0
UI11	Input internal sensor supply	Analog (0 – 10 V)	X12 (Pin 7,8)	Sensor P12, G0
UI12	Forced operation (press button)	Digital	X12 (Pin 9,10)	X:22, X:23
UI13	Extended operation (press button)	Digital	X12(Pin11,12)	X:24, X:25
UI14	Fire thermostat from electrical battery Frost/ice sensor at water battery	Digital Passive (Ni 1000)	X12(Pin13,14)	Thermostat F10 Temperatur sensor B5

* Not in use with external converter (L50)

** With external converter (L50) : X:10(Pin1,3) Supply converter AI2, G0
X:10(Pin2,3) Extract converter AI2, G0

*** With external converter (L50): X8(Pin1,2) Extract con. R1C, Supply con.R1C

Ark.nr:	1/6 - English
Teg.nr:	342077
Art.nr:	93512
Dato:	10.03.04
Versjon:	1.1

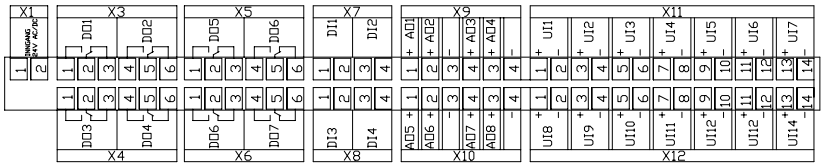

Farge kode interne ledninger
Colour code - Internal wiring

L1 1~ (N)	230V	Blå (lys)	Blue (light)	BU	
L2 1~	230V	Svart	Black	BK	
24V AC (G)	Led 1 +	Rød	Red	RD	
Zero (0-point) G0	Led 2 -	Hvit	White	WH	
24V DC	Led 1 +	Blå (mørk)	Blue (dark)	BU	
Zero (0-point) G0	Led 2 -	Hvit	White	WH	
0-10V DC		Grå	Grey	GY	
Pot.free signal		Grå	Grey	GY	
G0 (0-point) from	trafo 24V -				

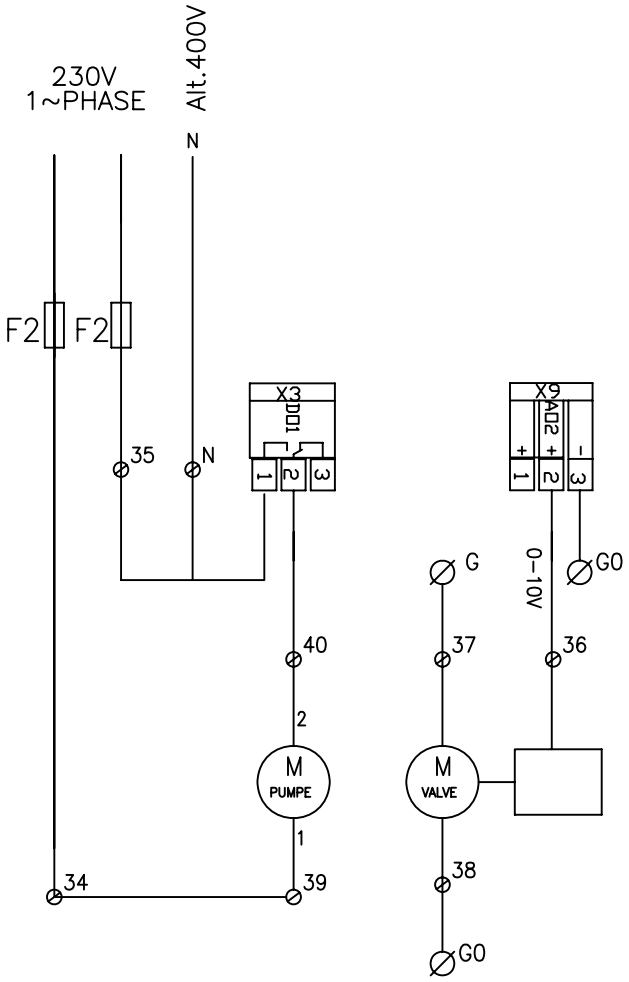

Symb.	Changes	Date/Sign.
2	Alt.400V Lagt inn	2008-02-05/LA
1	TEGNING ENDRET	2005-08-23/LA

No. Unit	Pos. No.	Name, type, dim.	Drawing no. Standard	Art. No.	Matr. Spec.

Date: 10.02.04
Drawn: T. I. Engen
Checked
Appr.
Projection
Scale

FLEXIT®

CONNECTIONS WATER HEATER
CS 1000 230V/400V
ART.NO.:93513

Replaces:
Replaced by:
342078
Side:

Lay-out Mountain

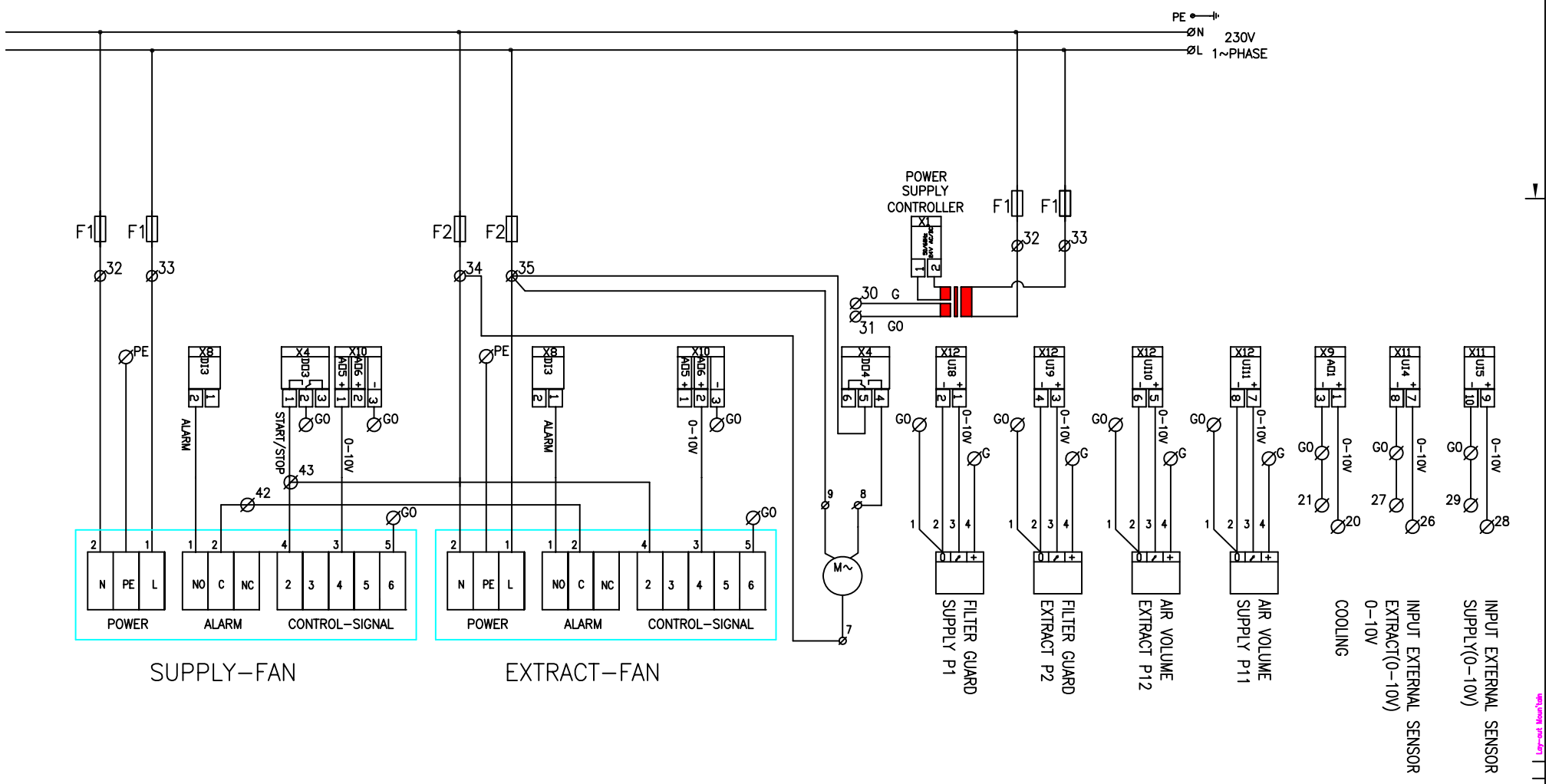

COMPONENT_DIMENSION_REF.:93529

Symb.	Changes	Date/Sign.
1	TEGNING ENDRET 2005-08-19/LA	

No. Unit	Pos. No.	Name, type, dim.	Drawing no. Standard	Art. No.	Matr. Spec.

Date: 21.12.04
Drawn: T. I. Engen
Checked
Appr.
Projection
Scale

FLEXIT

INTERNAL CONNECTIONS
230V – PHASE
ART.NR.:93524

Replaces:
Replaced by:
342098
Side:

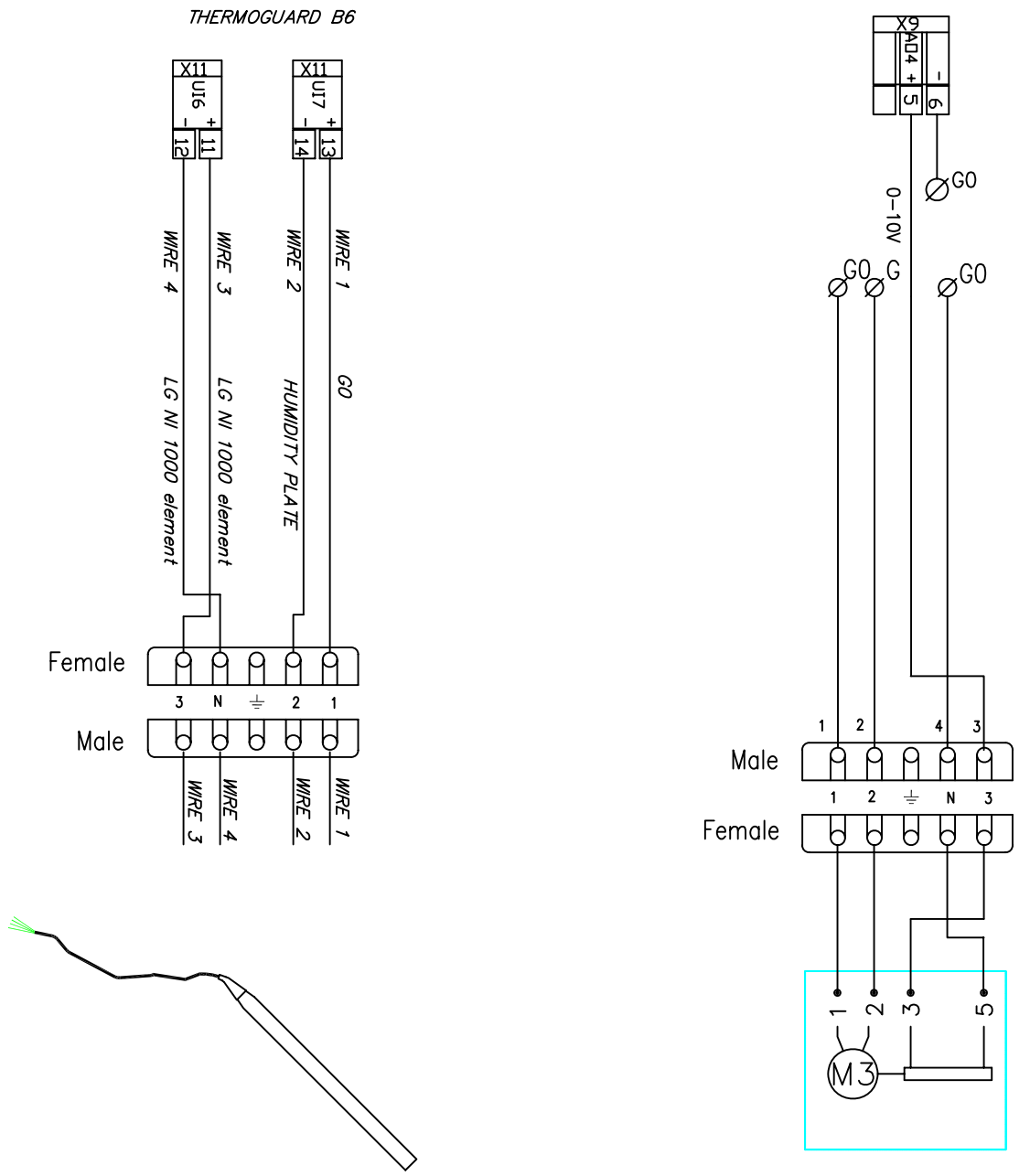

Symb.	Changes	Date/Sign.
1	TEGNING ENDRET 2005-08-23/LA	

No. Unit	Pos. No.	Name, type, dim.	Drawing no. Standard	Art. No.	Matr. Spec.

Date: 10.02.04
Drawn: T. I. Engen
Projection
Scale
Checked
Appr.

FLEXIT®

CONNECTIONS BY-PASS
230V/400v
ART.NR.:93516

Replaces:
Replaced by:
Side:
342081

Lay-out Moun'tain

Elkomponentoversikt CS1000

93529/ 2008-01

Type	F1	F2	F3	F4	K1	K2	SSR	EB/stk	Tot kW
L20 XE 230 V	2*16	2*16	3*50		3*45		50	2500W	15kW
L20 XE 400 V	2*16		3*25		3*25		50	2500W	15kW
L20 XW 230 V	2*10	2*10							
L30 XE 230 V	2*16	2*16	3*32	3*32	3*32	3*32	50	3333W	20kW
L30 XE 400 V	2*16		3*32		3*25	3*25	50	3333W	20kW
L30 XW 230 V	2*10	2*10							
S20/30 E 230 V	2*16	2*16	3*50		3*45		50	2000/2500W	12/15kW
S20/30 E 400 V	2*16		3*25		3*45		50	2000/2500W	12/15kW
S20/30 W 230 V	2*16	2*16							
S20/30 W 400 V	2*16								
L14 RE 230V	2*10		3*10		3*25		25	1200W	3,6kW
L14 RE 400V	1*10		3*10		3*25		25	1200W	3,6kW
L14 RE 230V	2*10		3*10		3*25		25	600W	1,8kW
L14 RE 400V	1*10		3*10		3*25		25	600W	1,8kW
L14 RW 230V	2*10								
L20 RE 230V	2*10	2*10	3*16		3*25		25	2000W	6kW
L20 RE 400V	2*10		3*16		3*25		25	2000W	6kW
L20 RE 230V	2*10	2*10	3*16		3*25		25	1000W	3kW
L20 RE 400V	2*10		3*16		3*25		25	1000W	3kW
L20 RW 230V	2*10	2*10							
L20 RW 400V	2*10								
L40/30 RE 230V	2*16	2*16	3*32		3*45		75	2000W	12kW
L40/30 RE 400V	2*16		3*25		3*45		75	2000W	12kW
L40/30 RE 230V	2*16	2*16	3*25		3*45		75	2000W	6kW
L40/30 RE 400V	2*16		3*16		3*45		75	2000W	6kW
L40/30 RW 230V	2*16	2*16							
L40/30 RW 400V	2*16								
L50XE 230V	3*32	2*10	external	external	3*45	3*45	50	2833W	34kW
L50XE 400V	2*25	1*10	external	external	3*45	3*45	50	2833W	34kW
L50XW 230V	3*32	2*10							
L50XW 400V	2*25	1*10							
L60RE 230V	3*16	3*16	3*50		3*45		75	2500W	15kW
L60RE 400V	3*16	3*16	3*25		3*45		75	2500W	15kW
L60RE 230V	3*16	3*16	3*25		3*45		75	2500W	7,5kW
L60RE 400V	3*16	3*16	3*16		3*45		75	2500W	7,5kW
L60RW 230V	3*16	3*16							
L60RW 400V	3*16	3*16							

Elkomponentoversikt CS500

Type	F1	F2	F3	F4	K1	K2	SSR	EB/stk	Tot kW
S12XE 230V	2*10		external		3*20		25	2000W	6kW
S12XE 400V	1*10		external		3*20		25	2000W	6kW
S12XW 230V	2*10								
S12RE 230V	2*10		external		3*20		25	2000W	6kW
S12RE 400V	1*10		external		3*20		25	2000W	6kW
S12RW 230V	2*10								
L14 RE 230V	2*10		3*10		3*25		25	1200W	3,6kW
L14 RE 400V	1*10		3*10		3*25		25	1200W	3,6kW
L14 RE 230V	2*10		3*10		3*25		25	600W	1,8kW
L14 RE 400V	1*10		3*10		3*25		25	600W	1,8kW
L14 RW 230V	2*10								
L20 RE 230V	2*10	2*10	3*16		3*25		25	2000W	6kW
L20 RE 400V	2*10		3*16		3*25		25	2000W	6kW
L20 RE 230V	2*10	2*10	3*16		3*25		25	1000W	3kW
L20 RE 400V	2*10		3*16		3*25		25	1000W	3kW
L20 RW 230V	2*10	2*10							
L20 RW 400V	2*10								
L40/30 RE 230V	2*16	2*16	3*32		3*45		75	2000W	12kW
L40/30 RE 400V	2*16		3*25		3*45		75	2000W	12kW
L40/30 RE 230V	2*16	2*16	3*25		3*45		75	2000W	6kW
L40/30 RE 400V	2*16		3*16		3*45		75	2000W	6kW
L40/30 RW 230V	2*16	2*16							
L40/30 RW 400V	2*16								
L60RE 230V	3*16	3*16	3*50		3*45		75	2500W	15kW
L60RE 400V	3*16	3*16	3*25		3*45		75	2500W	15kW
L60RE 230V	3*16	3*16	3*25		3*45		75	2500W	7,5kW
L60RE 400V	3*16	3*16	3*16		3*45		75	2500W	7,5kW
L60RW 230V	3*16	3*16							
L60RW 400V	3*16	3*16							