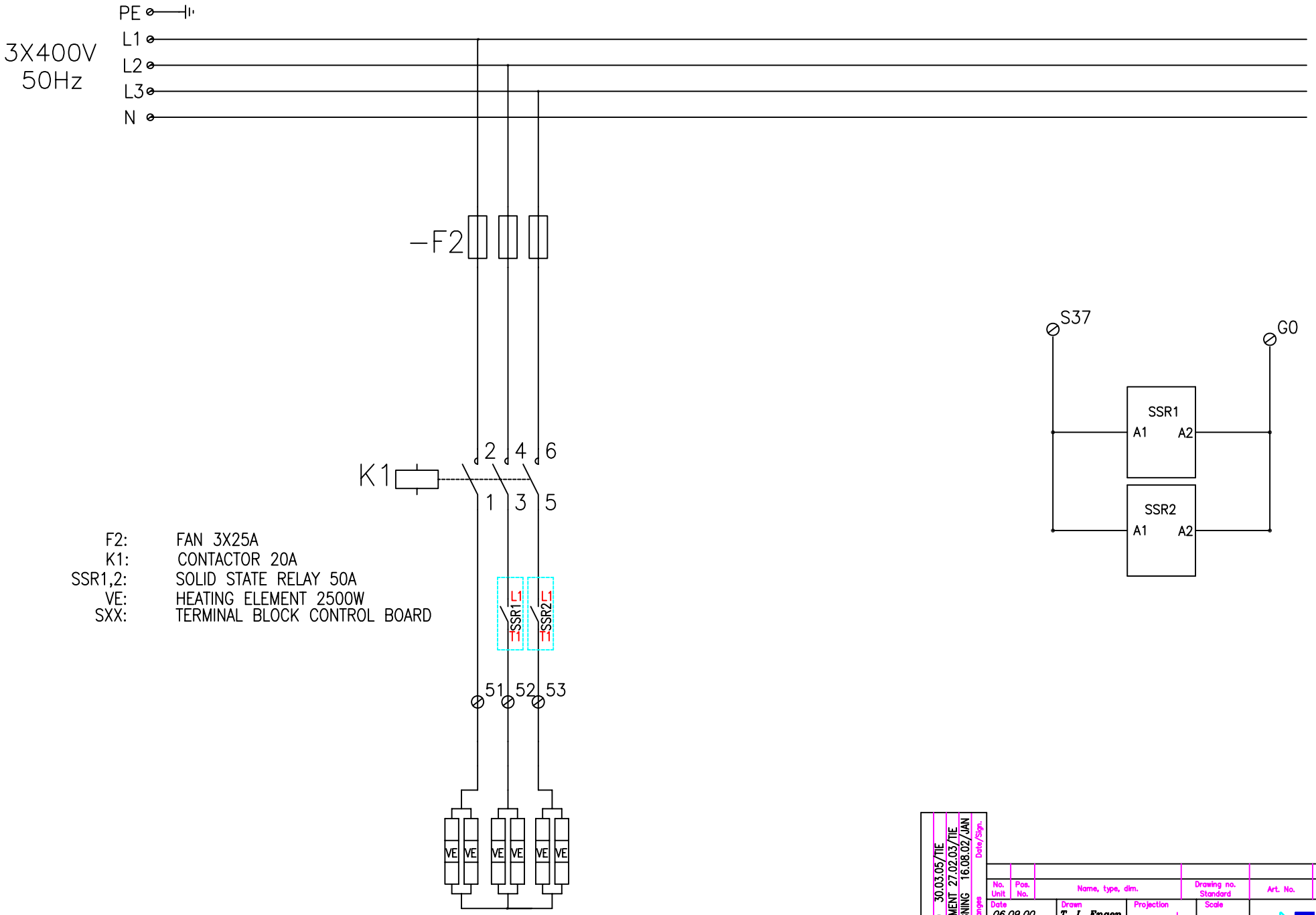

F2: FAN 3X25A
K1: CONTACTOR 20A
SSR1,2: SOLID STATE RELAY 50A
VE: HEATING ELEMENT 2500W
SXX: TERMINAL BLOCK CONTROL BOARD

Symb.	Changes	Date/Sign.
2	GND TIL GO	30.03.05/TIE
2	ENDRET ELEMENT	27.02.03/TIE
1	ENDRET TEGNING	16.08.02/JAN

No. Unit	Pos. No.	Name, type, dim.	Drawing no. Standard	Art. No.	Matr. Spec.
Date 06.09.00		Drawn T. I. Engen	Projection	Scale	
Checked		Appr.			

CONNECTION
15KW-400V

FLEXIT

Replaces: | Replaced by:

341673 | Side: 1/2

Layout MasterTrain

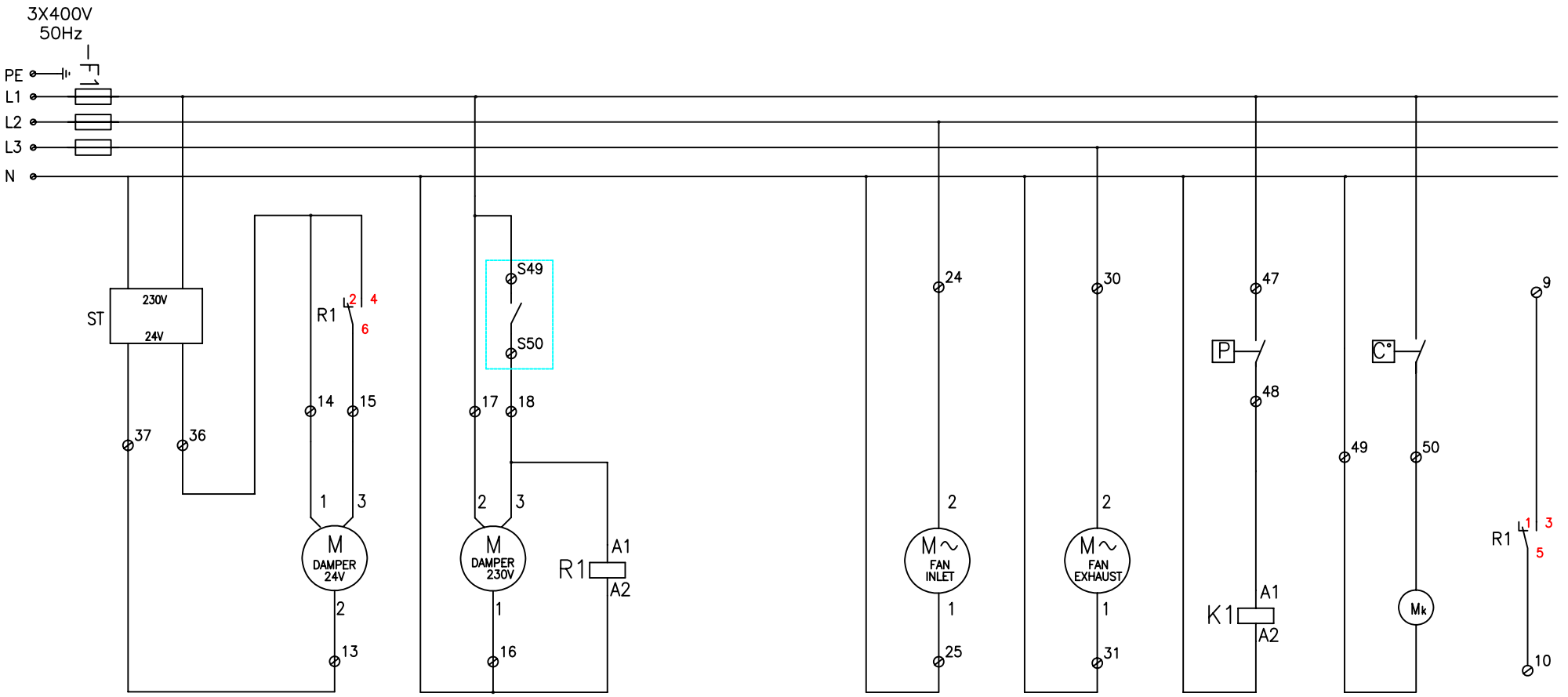

SXX: TERMINAL BLOCK ON CONTROL BOARD
F1: FUSE 3X16A
ST: TRASFORMER 230V TO 24V
BT2: TERMOSTAT I EL.SKAP M/ MAN.RESET
R1: RELAY FINDER 56.32 12A 250V
K1: CONTACTOR 20A

Mk: KJØLEVIFTE TIL EL.ROM

Changes	Date/Sign.
2 ENDRING GO	2005-08-11/LA
1 ENDRET TEGNING	16.08.02/JAN
Symb.	

No. Unit	Pos. No.	Name, type, dim.	Drawing no. Standard	Art. No.	Matr. Spec.

Date	Drawn	Projection	Scale
06.09.00	T. I. Engen		
Checked	Appr.		

FLEXIT®

WIRING COMPONENTS
L20 400V

Replaces:	Replaced by:
341673	Side: 2/2

EXTERNAL CONNECTIONS

INTERNAL CONNECTIONS

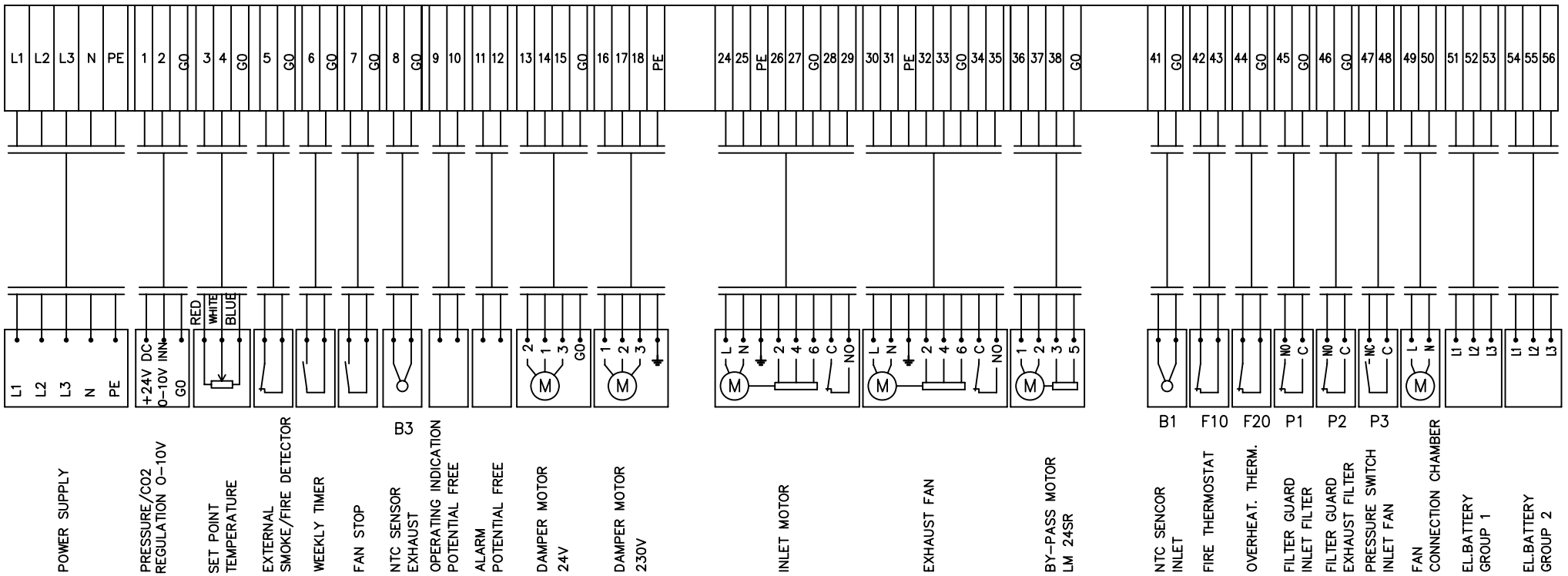

INTERNAL WIRING, GRUNDFOS MOTOR 0.75 – 1.1KW

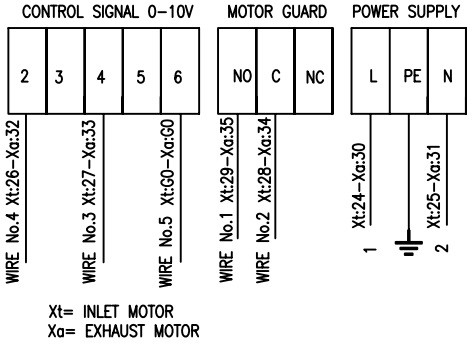

Xt= INLET MOTOR
Xa= EXHAUST MOTOR

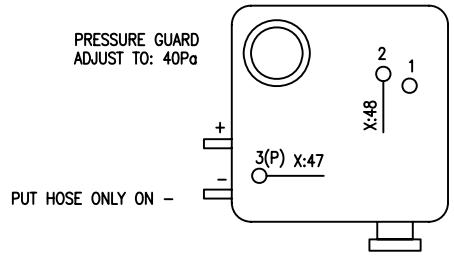

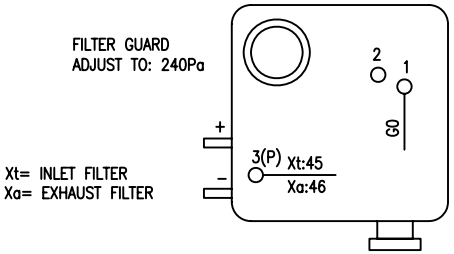

Xt= INLET FILTER
Xa= EXHAUST FILTER

BY–PASS MOTOR LM 24SR

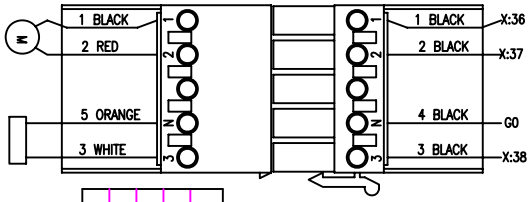

Position bypass in centre
Position motor in centre

COLOUR CODE – INTERNAL WIRING

L1	230V	BLACK	BK
L2	230V	BLACK	BK
24V AC (G)	LED 1+	RED	RD
ZERO (0–POINT) GO	LED 2–	WHITE	WH
24V DC	LED 1+	BLUE(DARK)	BU
ZERO (0–POINT) GO	LED 2 –	WHITE	WH
0–10V DC		GREY	GY
POT.FREE SIGNAL		GREY	GY
GO (0–POINT) FROM TRAFO 24V–			

Changes	Date/Sign.
2 ENDRING GO	2005-08-11/LA
1 NY TYPE MOTOR	04.09.01/TIE

No. Unit	Pos. No.	Name, type, dim.	Drawing no. Standard	Art. No.	Matr. Spec.

Date	Drawn	Projection	Scale
06.09.00	P. Gaasvik		
Checked	Appr.		

FLEXIT®

CONNECTOR DIAGRAM
L20–L30 XE

Replaces:	Replaced by:
341671	Side: 1/3

CONTROL BOARD

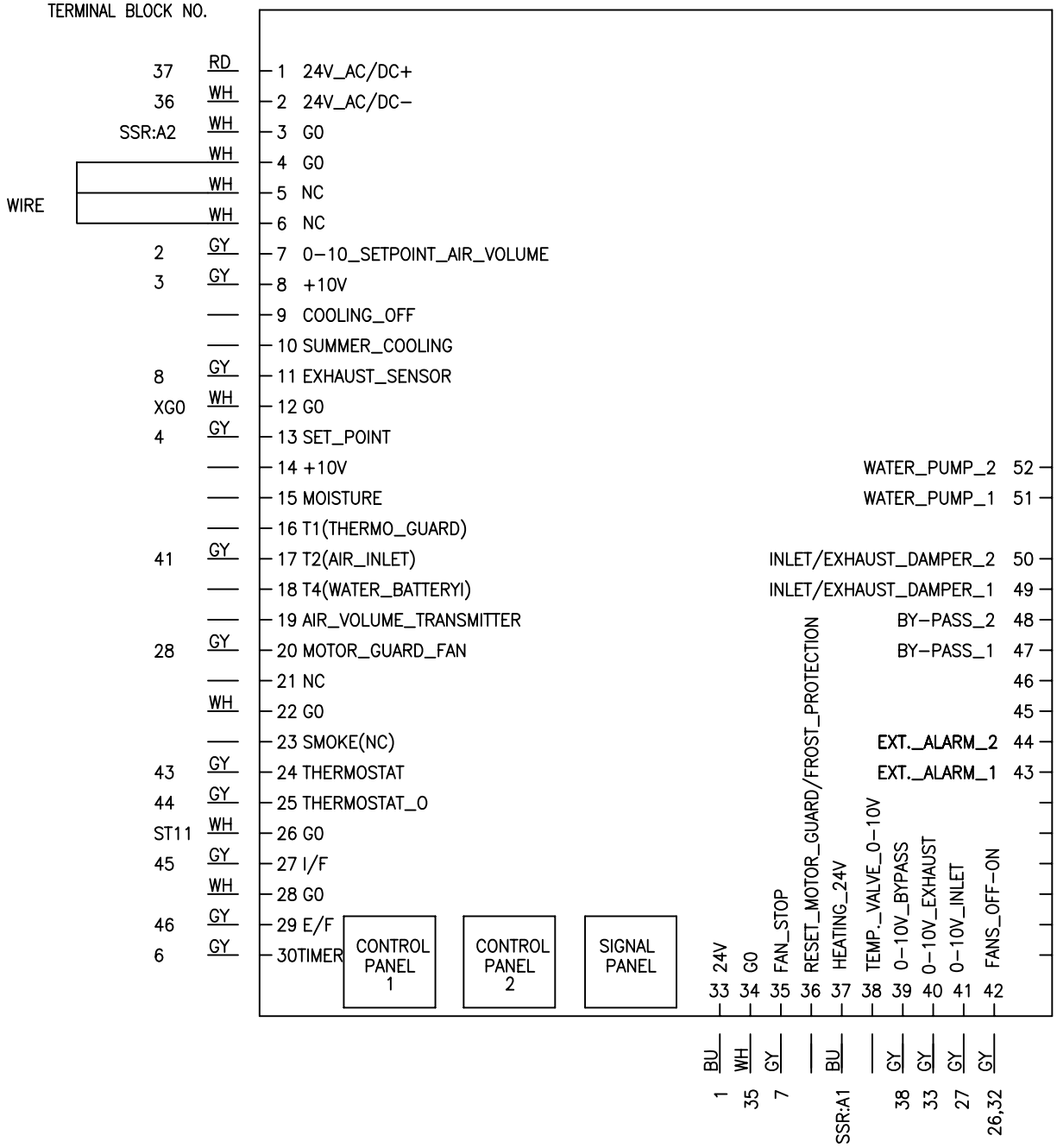

K2:A1 = EL. GROUP CONTACTOR

COLOUR CODE – INTERNAL WIRING

L1	230V	BLACK	BK
L2	230V	BLACK	BK
24V AC (G)	LED 1+	RED	RD
ZERO (0–POINT) G0	LED 2–	WHITE	WH
24V DC	LED 1+	BLUE(DARK)	BU
ZERO (0–POINT) G0	LED 2 –	WHITE	WH
0–10V DC		GREY	GY
POT.FREE SIGNAL		GREY	GY
G0 (0–POINT) FROM TRAFO 24V–			

Changes: 3 Endret G0 2005–12–13/LA; 2 Endret tilkobl 15.08.02/TIE; Symb.; Date/Sign.

No. Unit	Pos. No.	Name, type, dim.	Drawing no. Standard	Art. No.	Matr. Spec.
Date 06.09.00	Drawn T. I. Engen	Projection	Scale	FLEXIT	
Checked	Appr.				

CONNECTIONS CONTROL BOARD
L20–L30 XE

Replaces: | Replaced by:

341671 | Side: 2/3

Lay-out Mountain

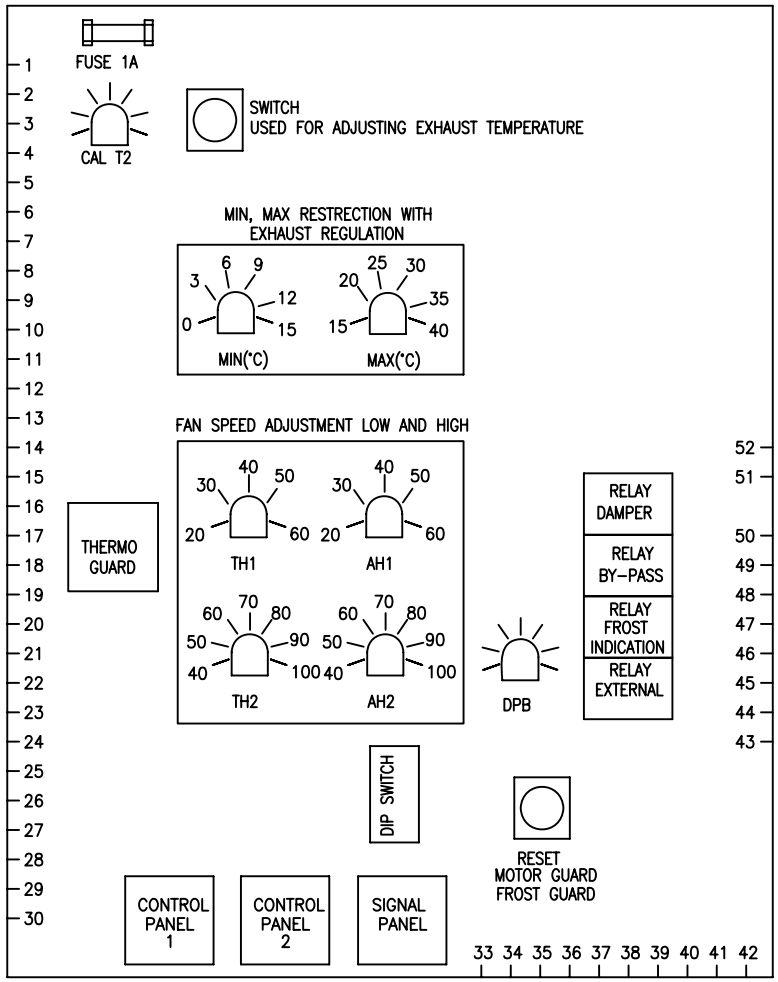

MAX(°C): MAX RESTRICTION OF INLET AIR TEMPERATURE WITH EXHAUST TEMP. REGULATION.
MIN(°C): MIN RESTRICTION OF INLET TEMPERATURE WITH EXHAUST TEMP. REGULATION.
TH1: POT.METER FOR ADJUSTING AIR SPEED 1 ON INLET FROM 20% TO 60%
AH1: POT.METER FOR ADJUSTING AIR SPEED 1 ON EXHAUST FROM 20% TO 60%
TH2: POT.METER FOR ADJUSTING AIR SPEED 2 ON INLET FROM 40% TO 100%
AH2: POT.METER FOR ADJUSTING AIR SPEED 2 ON EXHAUST FROM 40% TO 100%
CAL T2: FACTORY SETTING – POT.METER SHOULD NOT BE CHANGED TO CALIBRATE INLET SET POINT.
DPB: FACTORY SETTING – POT.METER SHOULD NOT BE CHANGED TO ADJUST SENSITIVITY OF HEATING

DIP SWITCH: SWITCH FOR SPECIAL FUNCTIONS

1: WHEN WATER BATTERY:OFF. WHEN ELECTRIC BATTERY:ON
2: FAN STOP IN CONNECTION WITH NIGHT–TIME REDUCTION
MUST THEN BE IN ON POSITION
3: REDUCES THE INCOMING AIR TEMPERATURE BY 3°C AT NIGHT– TIME
MUST THEN BE IN ON POSITION
4: REDUCES FAN SPEED AT NIGHT–TIME
MUST THEN BE IN ON POSITION
5: FOR TEMPERATURE CONTROLLED FAN REDUCTION IN THE "ON" POSITION
6: BY–PASS AFFECTED BY RESIDUAL HEAT
MUST BE IN THE "ON"POSITION
7: CONTROLS THE DIFFERENT ELEMENT GROUPS
MUST BE IN THE "ON" POSITION ON L30, AND IN THE "OFF" POSITION ON L20
8: THERMO GUARD
IF ISDN CONNECTION, MUST BE IN THE "OFF" POSITION

No. Unit	Pos. No.	Name, type, dim.	Drawing no. Standard	Art. No.	Matr. Spec.

Date 06.09.00 | Drawn T. I. Engen | Projection | Scale | FLEXIT®
Checked | Appr.

CONTROL BOARD
L20–L30 XE

Replaces: | Replaced by:
341671 | Side: 3/3

Changes | Date/Sign. | Symb.

Lay-out Mountain