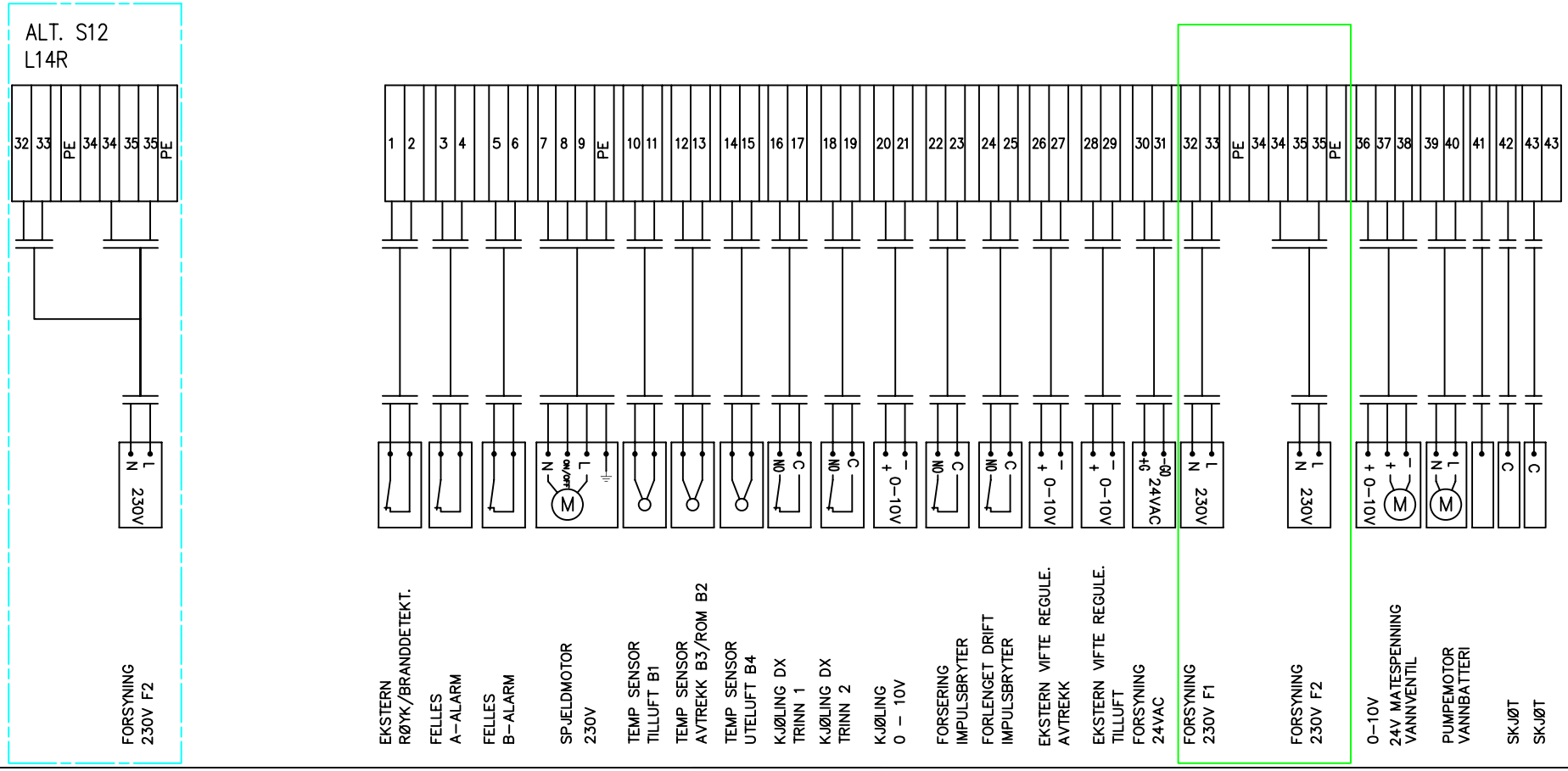

TILKOBLING SPJELD

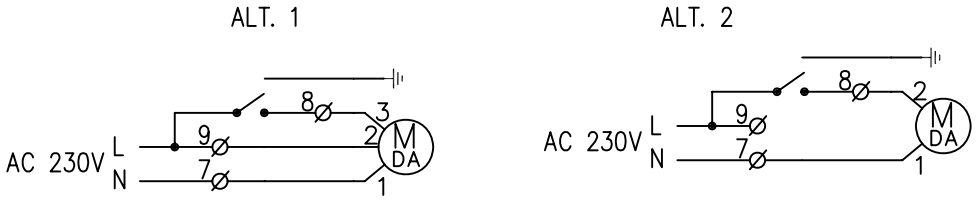

Changes	Date/Sign.
2 TEGNING ENDRET 2007-10-25/LA	
1 TEGNING ENDRET 2005-08-23/LA	
Symb.	

No. Unit	Pos. No.	Name, type, dim.	Drawing no. Standard	Art. No.	Matr. Spec.

Date	Drawn	Projection	Scale
10.02.04	T. I. Engen		
Checked	Appr.		

FLEXIT®

REKKEKLEMMESKJEMA CS1000
VANNBATTERI
ART.NR.:93511

Replaces:	Replaced by:
342076	Side:

TILKOBLING TERMINAL OG KOMPONENTER

CS1000 IO	Funksjon	IO Type	Tilkobling CS1000	Tilkobling komponenter
Rele utgang				
DO1	Pumpe (vannbatteri)/ Varme trinn 2 (el.batteri)	Digital	X3 (Pin 1,2)	X:35, X:40 X:41, K2-A1
DO2	Varme trinn 3 (el.batteri)	Digital	X3 (Pin 4,5)	
DO3	Vifte start/stopp-intern	Digital	X4 (Pin 1,2)	X:43, G0*
DO4	Ute spjeld	Digital	X4 (Pin 4,5)	X:8, X:35
DO5	Kjøling DX trinn1	Digital	X5 (Pin 1,2)	X:16, X:17
DO6	Kjøing DX trinn2	Digital	X5 (Pin 4,5)	X:18, X:19
DO7	Alarm utgang prioritet A	Digital	X6 (Pin 1,2)	X:3, X:4
DO8	Alarm utgang prioritet B	Digital	X6 (Pin 4,5)	X:5, X:6
Analog utgang				
AO1	Kjøling	Analog (0 - 10V)	X9 (Pin 1,3)	X:20, G0
AO2	Ettervarme full range vannbatteri	Analog (0 - 10V)	X9 (Pin 2,3)	X:36, G0
AO3	Puls med Modulering 0 eller 10V (ON/OFF)	Analog (0/10VDC)	X9 (Pin 4,6)	X:SSR1-2 A1, G0
AO4	Rotor Vekslerspjeld	Analog (0 - 10 V)	X9 (Pin 5,6)	SP1500(X:33), G0 Spjeld led.3, G0
AO5	Tilluftsvifte.	Analog (0 - 10 V)	X10 (Pin 1,3)	VifteTil X:4, G0**
AO6	Avtrekksvifte.	Analog (0 - 10 V)	X10 (Pin 2,3)	VifteAvtr X:4, G0**
AO7	Luftmengde indikering avtrekk	Analog (0 - 10 V)	X10 (Pin 4,6)	
AO8	Luftmengde indikering tilluft	Analog (0 - 10 V)	X10 (Pin 5,6)	
Binary inngang				
DI1	Plateveksler: Termostat (el.batteri) Rotor: Rotor alarm	Digital	X7 (Pin 1,2)	Termostat F20 SP1500X:42,SP1500X:43
DI2	Alarm ekstern brann/røyk	Digital	X7 (Pin 3,4)	X:1, X:2
DI3	Alarm vifte tilluft/avtrekk	Digital	X8 (Pin1,2)	VifteAvtX:NO,VifteTilX:NO***
DI4	Ekstern start/stopp	Digital	X8 (Pin 3,4)	
Universal inngang				
UI1	Avtrekk/rom temperatur	Passive (Ni 1000)	X11 (Pin 1,2)	X:12, X:13
UI2	Tilluftstemperature	Passive (Ni 1000)	X11 (Pin 3,4)	X:10, X:11
UI3	Utetemperature	Passive (Ni 1000)	X11 (Pin 5,6)	X14, X:15
UI4	Ekstern sensor Avtrekk (trykk eller CO2)	Analog (0 - 10 V)	X11 (Pin 7,8)	X:26, G0
UI5	Ekstern sensor Tilluft (trykk eller CO2)	Analog (0 - 10 V)	X11 (Pin 9,10)	X:28, G0
UI6	Plateveksler: Frost/is sensor Rotor: Termostat el.batteri	Analog	X11(Pin11,12)	Termovakt Termostat F20
UI7	Tom		X11(Pin13,14)	
UI8	Filtervakt tilluft	Analog (0 – 10 V)	X12(Pin 1,2)	Filtervakt P1, G0
UI9	Filtervakt avtrekk	Analog (0 – 10 V)	X12(Pin 3,4)	Filtervakt P2, G0
UI10	Intern sensor Tilluft (trykk/luftmengde)	Analog (0 – 10 V)	X12(Pin 5,6)	Sensor P11, G0
UI11	Intern sensor Avtrekk (trykk/luftmengde)	Analog (0 – 10 V)	X12(Pin 7,8)	Sensor P12, G0
UI12	Forsert drift	Digital	X12(Pin 9,10)	X:22, X:23
UI13	Forlenget drift	Digital	X12(Pin11,12)	X:24, X:25
UI14	Termostat el.batteri Frost/is sensor vannbatteri	Digital Passive (Ni 1000)	X12(Pin13,14)	Thermostat F10 Temperatur sensor B5

* Ikke I bruk ved ekstern frekvensomformer (L50)
** Med ekstern frekvensomformer (L50) : X:10(Pin1,3) Tillufts-omformer AI2, G0
X:10(Pin2,3) Avtrekks-omformer AI2, G0
*** With external converter (L50): X8(Pin1,2) Avtrekks-omformer R1C, Tillufts-omformer R1C

Ark.nr:	2/6 - Norsk
Teg.nr:	342077
Art.nr:	93512
Dato:	10.03.04
Versjon:	1.1

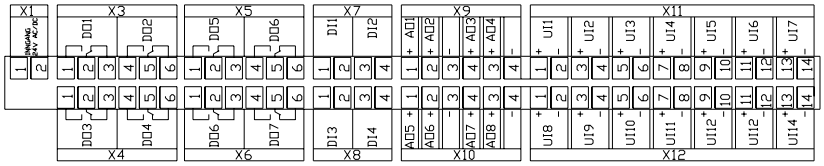

Farge kode interne ledninger
Colour code - Internal wiring

L1 1~ (N)	230V	Blå (lys)	Blue (light)	BU	
L2 1~	230V	Svart	Black	BK	
24V AC (G)	Led 1 +	Rød	Red	RD	
Zero (0-point) G0	Led 2 -	Hvit	White	WH	
24V DC	Led 1 +	Blå (mørk)	Blue (dark)	BU	
Zero (0-point) G0	Led 2 -	Hvit	White	WH	
0-10V DC		Grå	Grey	GY	
Pot.free signal		Grå	Grey	GY	
G0 (0-point) from	trafo 24V -				

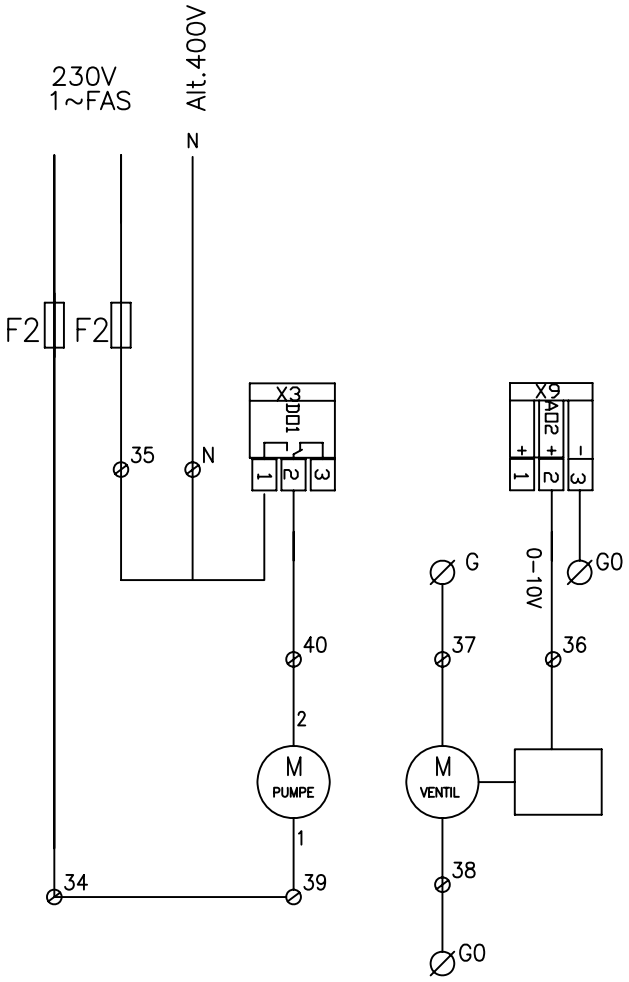

Symb.	Changes	Date/Sign.
2	Alt.400V Lagt inn	2008-02-05/LA
1	TEGNING ENDRET	2005-08-23/LA

No. Unit	Pos. No.	Name, type, dim.	Drawing no. Standard	Art. No.	Matr. Spec.

Date: 10.02.04
Drawn: T. I. Engen
Checked:
Appr.:
Projection:
Scale:

FLEXIT®

KOBLING VANNBATTERI
CS 1000 230V/400V
ART.NR.:93513

Replaces:
Replaced by:
342078
Side:

Lay-out Mountain

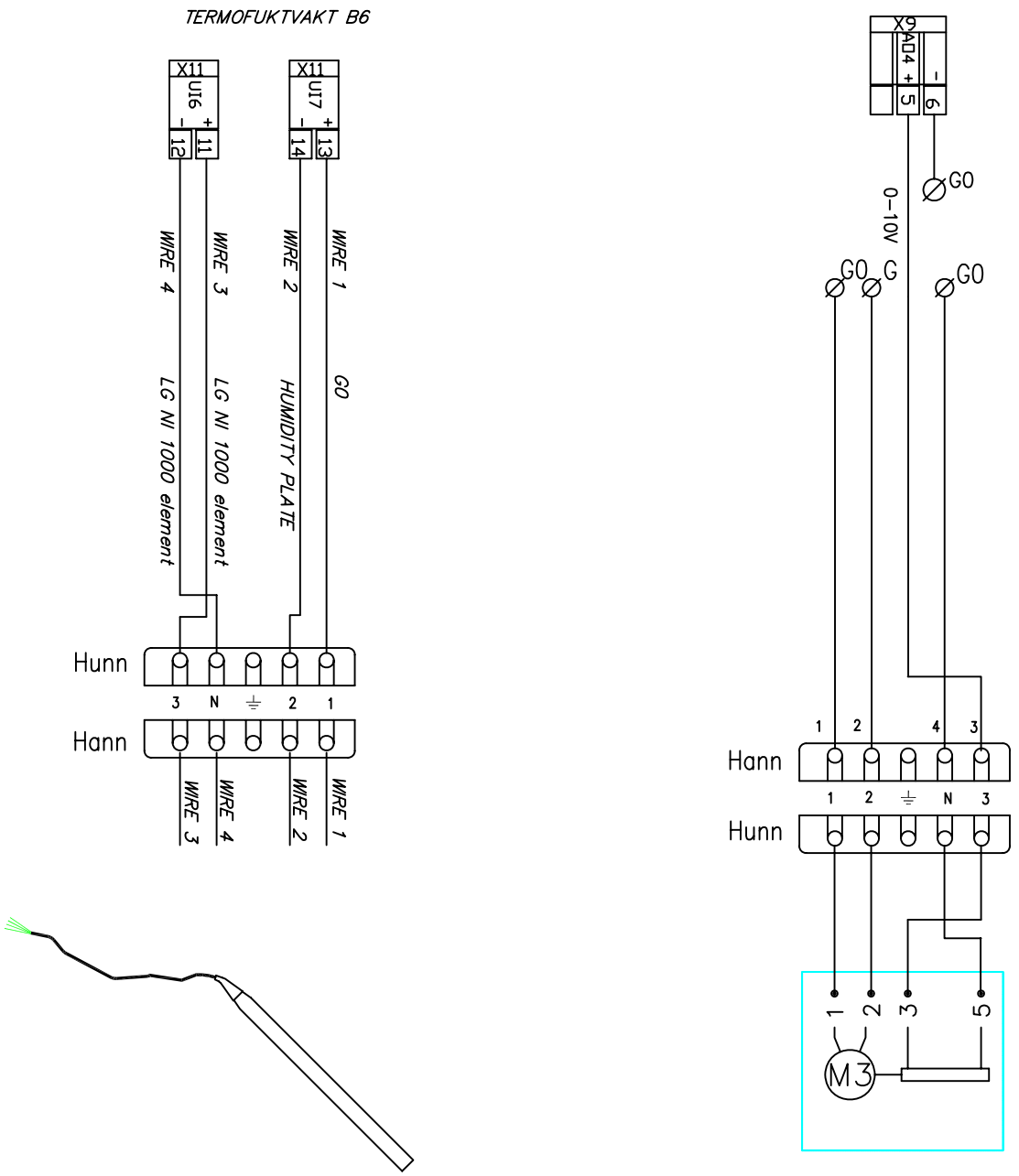

M3: BY-PASS MOTOR

Symb.	1	TEGNING ENDRET 2005-08-23/LA	Changes	Date/Sign.		
No. Unit	Pos. No.	Name, type, dim.	Drawing no. Standard	Art. No.	Matr. Spec.	
Date 10.02.04	Drawn T. I. Engen	Projection	Scale	FLEXIT		
Checked	Appr.					
KOBLING BY-PASS 230V/400v ART.NR.:93516				Replaces:	Replaced by:	
				342081	Side:	

Lay-out Mountain

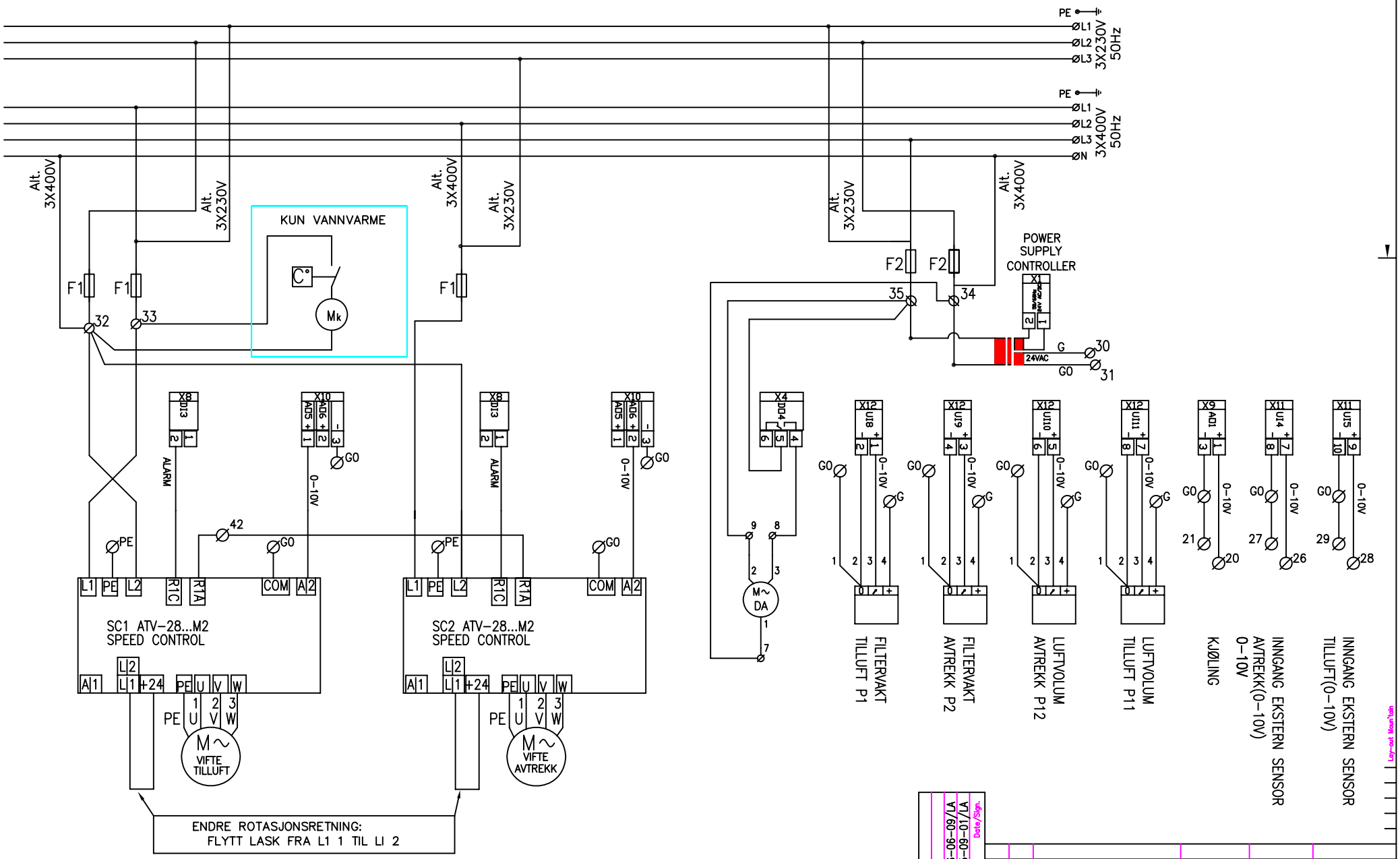

FOR_KOMPONENT_DIMENSJONER_SE:93529

Symb.	Changes	Date/Sign.
2	ENDRET	2006-06-09/LA
1	ENDRET	2005-09-01/LA

No. Unit	Pos. No.	Name, type, dim.	Drawing no. Standard	Art. No.	Matr. Spec.

Date: 19.05.04 | Drawn: T. I. Engen | Projection | Scale | FLEXIT

Checked | Appr.

KOBLING INTERNT EKSTERN FREK.OMF
230V/400V
ART.NR.:93528

Replaces: | Replaced by:

342099 | Side:

Elkomponentoversikt CS1000

93529 / 2010-10

Type	F1	F2	F3	F4	K1	K2	SSR	EB/stk	Tot kW
L20 XE 230 V	2*16	2*16	3*50		3*45		50	2500W	15kW
L20 XE 400 V	2*16		3*25		3*25		50	2500W	15kW
L20 XW 230 V	2*10	2*10							
L30 XE 230 V	2*16	2*16	3*32	3*32	3*32	3*32	50	3333W	20kW
L30 XE 400 V	2*16		3*32		3*25	3*25	50	3333W	20kW
L30 XW 230 V	2*10	2*10							
S20/30 E 230 V	2*16	2*16	3*50		3*45		50	2000/2500W	12/15kW
S20/30 E 400 V	2*16		3*25		3*45		50	2000/2500W	12/15kW
S20/30 W 230 V	2*16	2*16							
S20/30 W 400 V	2*16								
L14 RE 230V	2*10		3*10		3*25		25	1200W	3,6kW
L14 RE 400V	1*10		3*10		3*25		25	1200W	3,6kW
L14 RE 230V	2*10		3*10		3*25		25	600W	1,8kW
L14 RE 400V	1*10		3*10		3*25		25	600W	1,8kW
L14 RW 230V	2*10								
L20 RE 230V	2*10	2*10	3*16		3*25		25	2000W	6kW
L20 RE 400V	2*10		3*16		3*25		25	2000W	6kW
L20 RE 230V	2*10	2*10	3*16		3*25		25	1000W	3kW
L20 RE 400V	2*10		3*16		3*25		25	1000W	3kW
L20 RW 230V	2*10	2*10							
L20 RW 400V	2*10								
L40/30 RE 230V	2*16	2*16	3*32		3*45		75	2000W	12kW
L40/30 RE 400V	2*16		3*25		3*45		75	2000W	12kW
L40/30 RE 230V	2*16	2*16	3*25		3*45		75	2000W	6kW
L40/30 RE 400V	2*16		3*16		3*45		75	2000W	6kW
L40/30 RW 230V	2*16	2*16							
L40/30 RW 400V	2*16								
L50XE 230V	3*25	2*10	external	external	3*45	3*45	50	2833W	34kW
L50XE 400V	2*25	1*10	external	external	3*45	3*45	50	2833W	34kW
L50XW 230V	3*25	2*10							
L50XW 400V	2*25	1*10							
L60RE 230V	3*16	3*16	3*50		3*45		75	2500W	15kW
L60RE 400V	3*16	3*16	3*25		3*45		75	2500W	15kW
L60RE 230V	3*16	3*16	3*25		3*45		75	2500W	7,5kW
L60RE 400V	3*16	3*16	3*16		3*45		75	2500W	7,5kW
L60RW 230V	3*16	3*16							
L60RW 400V	3*16	3*16							