N

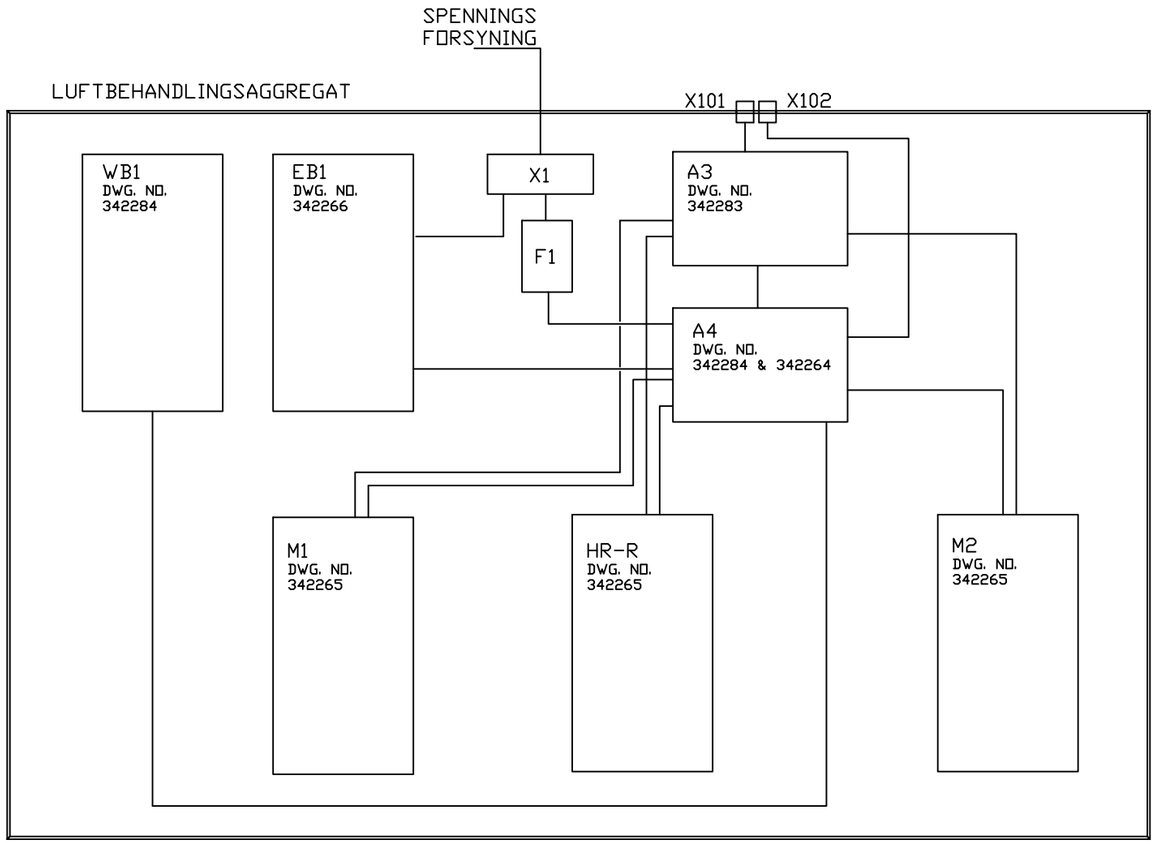

A3

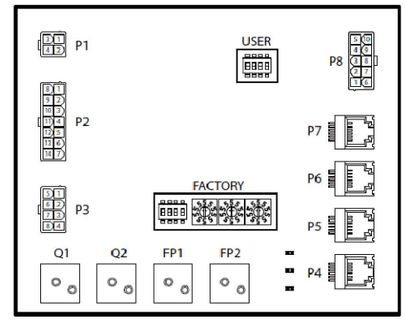

A4

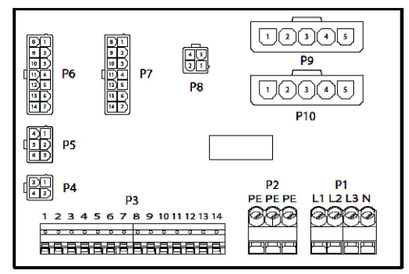

Symb.	Changes	Date/Sign.
2	Monochrome PDF	160915/MAJ

No. Unit	Pos. No.	Name, type, dim.	Drawing no. Standard	Art. No.	Matr. Spec.
Date 2014-09-23	Drawn TOE	Projection	Scale	FLEXIT®	
Checked	Appr.			Replaces:	Replaced by:

CONNECTION DIAGRAM, NO AUTOMATIC
S10, S15, S20 & S32
ART.NO. 114048

342282

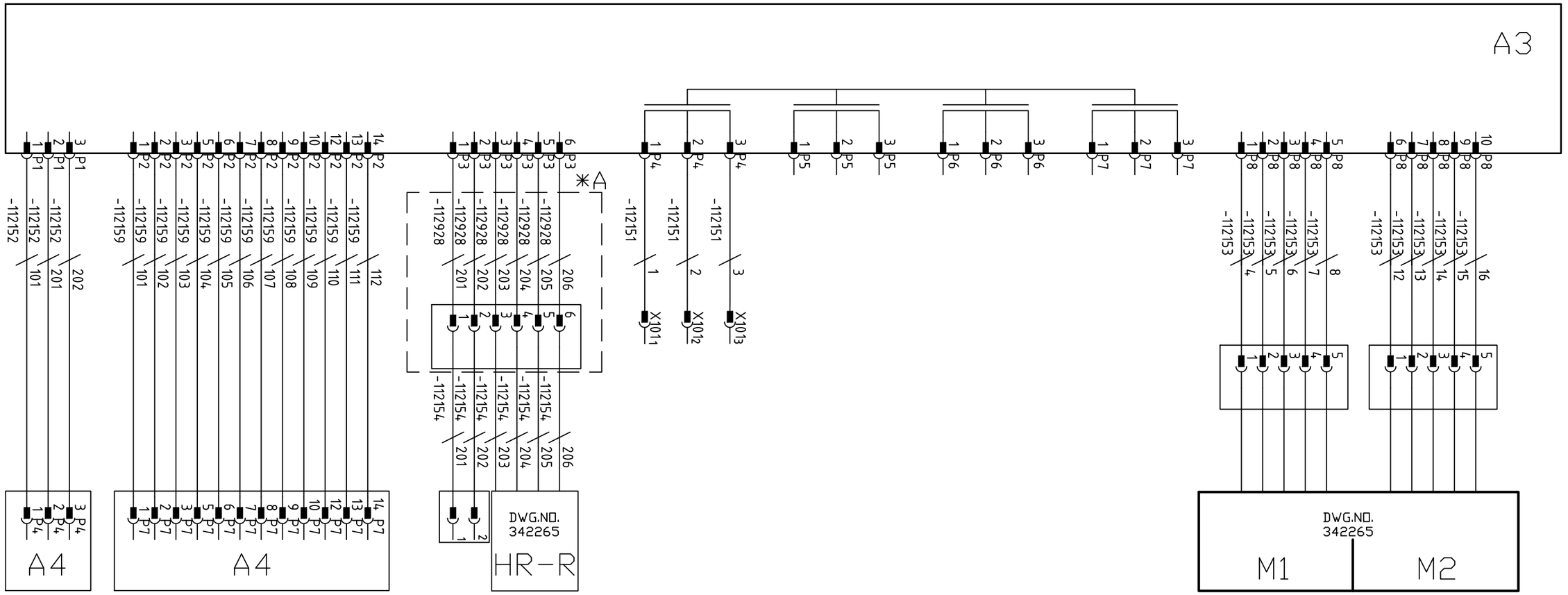

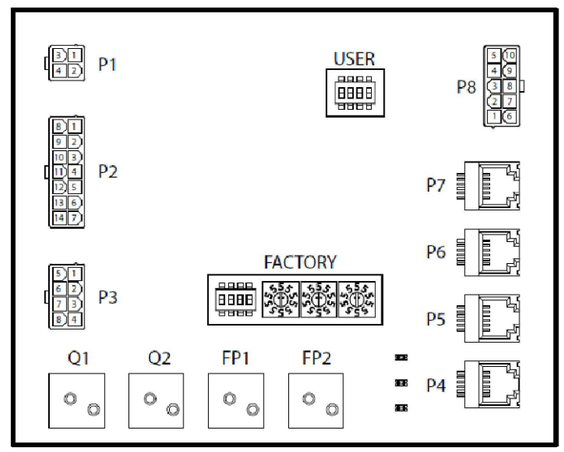

"USER" Dip switch

DIP Switch	ON	OFF	Remark
1	VARMEBATTERI	IKKE VARMEBATTERI	ON = MED VARMEBATTERI OFF = IKKE NOE VARMEBATTERI
2	ELEKTRISK	VANN	TYPE VARMEBATTERI.
3	JA	NEI	M1 MOTORVERN LASKET.
4	JA	NEI	M2 MOTORVERN LASKET.

( ) = Fabrikkinnstilling

*A = Gjelder kun modeller i L-serien

Symb.	Changes	Date/Sign.
2	Monochrome PDF	160915/MAJ

No. Unit	Pos. No.	Name, type, dim.	Drawing no. Standard	Art. No.	Matr. Spec.
Date 2014-09-23	Drawn TOE	Projection	Scale	FLEXIT®	
Checked	Appr.				
MODBUS I/O-EXTENDER				Replaces:	Replaced by:
A3				342283	

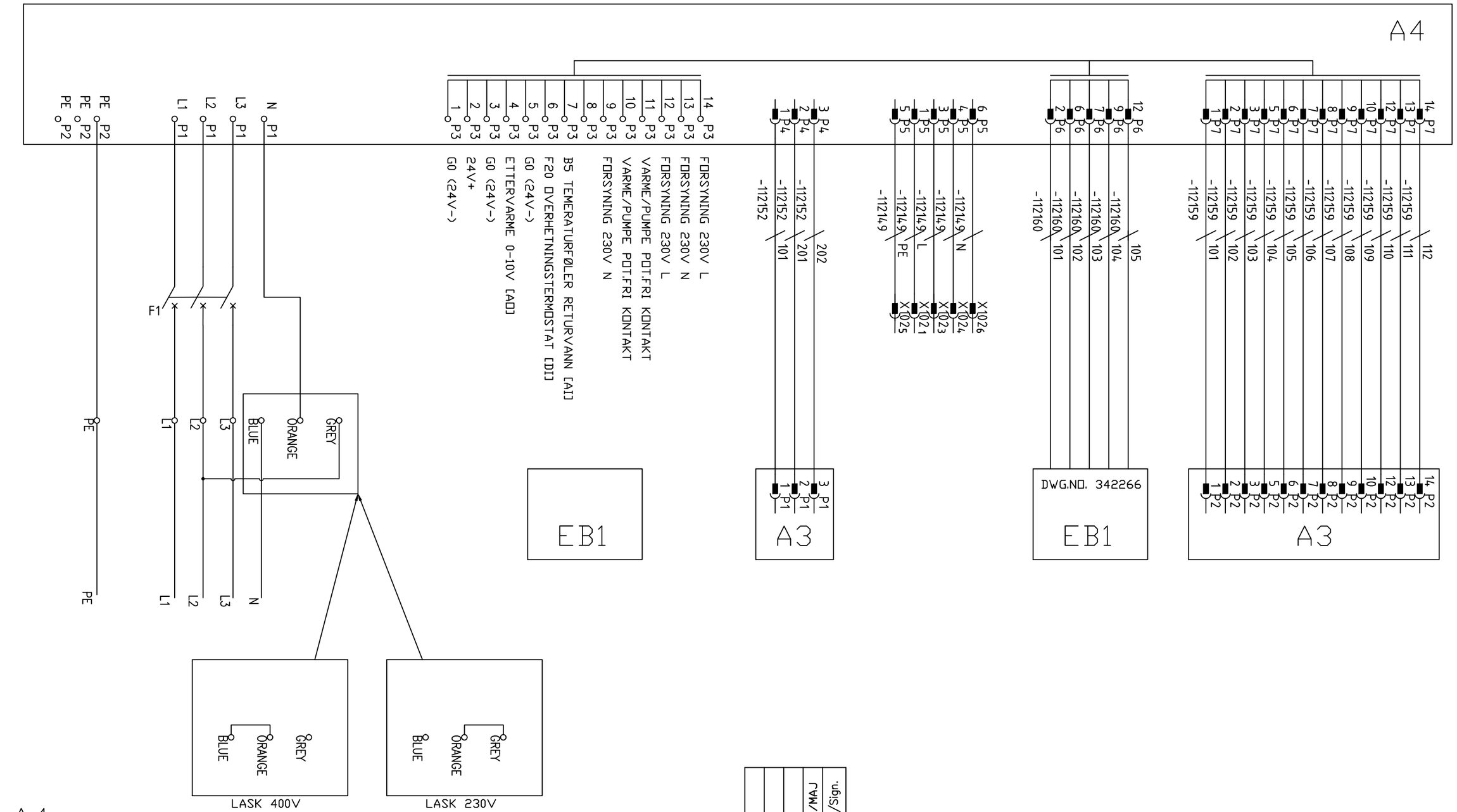

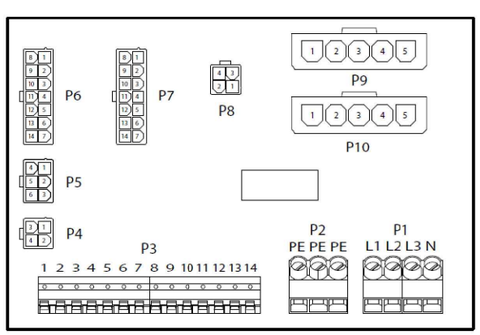

Date/Sign.	Changes	Monochrome PDF	Symb.
160915/MAJ			
		2	

No. Unit	Pos. No.	Name, type, dim.	Drawing no. Standard	Art. No.	Matr. Spec.
Date 2014-09-23	Drawn TOE	Projection	Scale	FLEXIT®	
Checked	Appr.				
POWER DISTRIBUTION BOARD				Replaces:	Replaced by:
A4				342284	

S10, L14, S15, L20 & S20

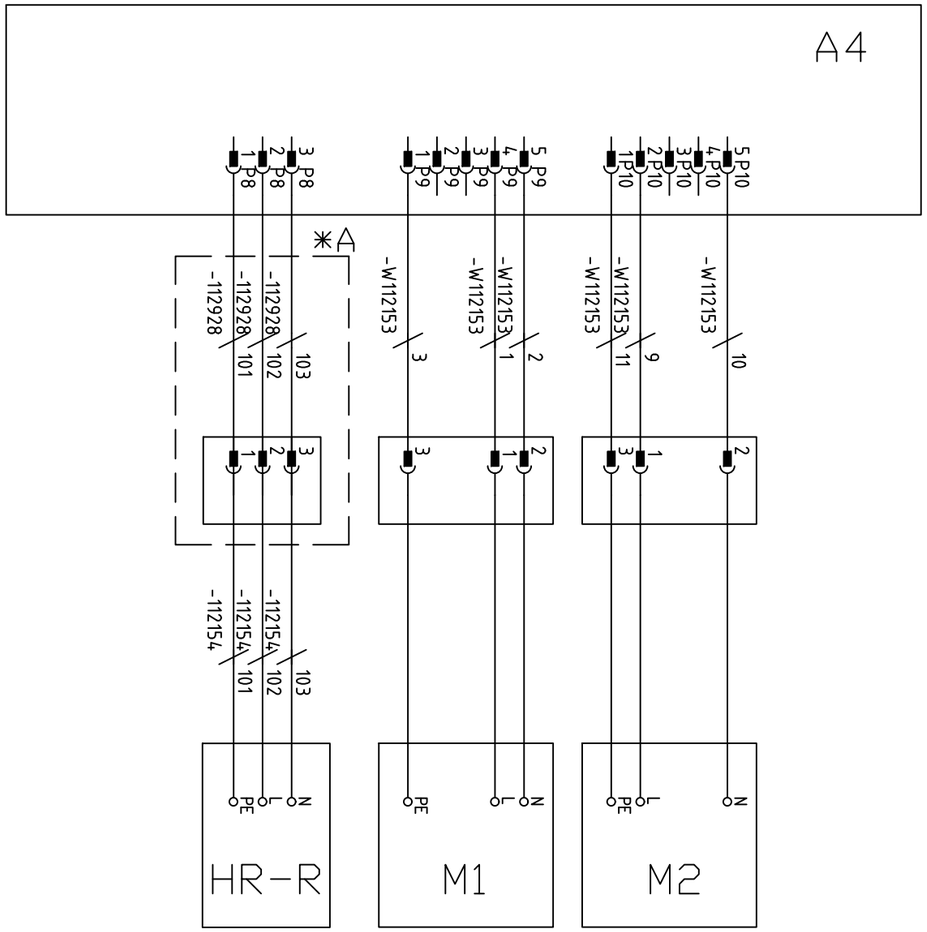

L26, L32 & S32

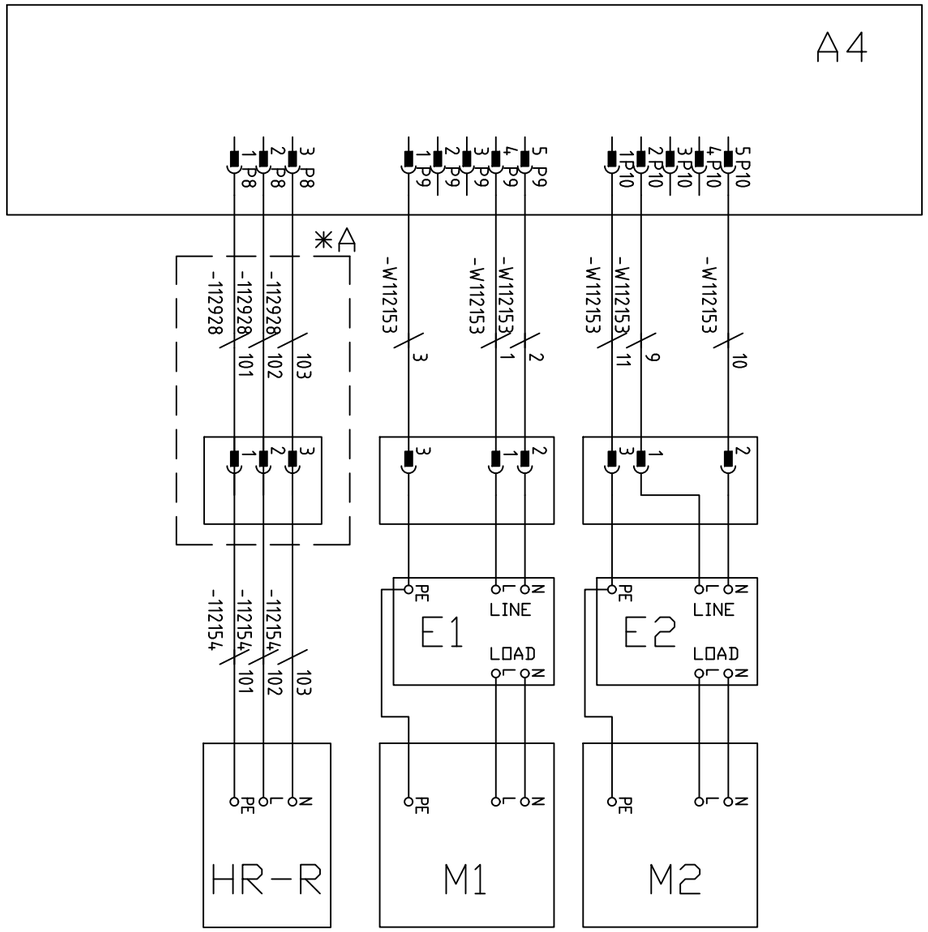

A4

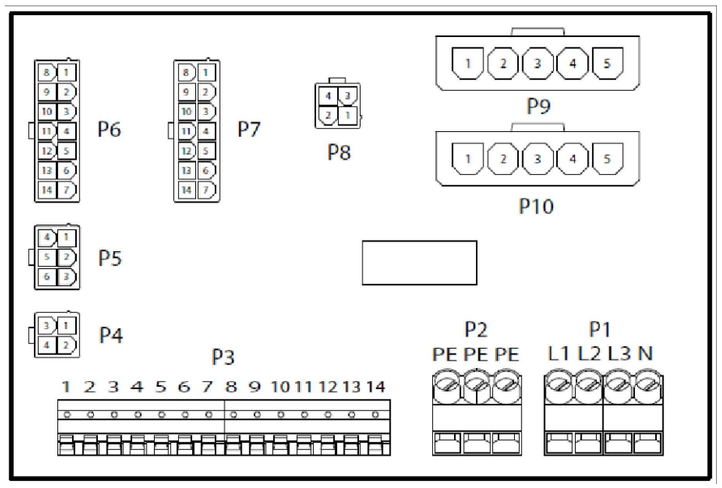

*A = Gjelder kun modeller i L-serien

Symb.	Changes	Date/Sign.
4	Monochrome PDF	160915/MAJ
3	DRAWING UPDATED	131129/TOE
2	DRAWING UPDATED	130508/PAG
1	DRAWING UPDATED	130218/PAG

No. Unit	Pos. No.	Name, type, dim.	Drawing no. Standard	Art. No.	Matr. Spec.

Date	Drawn	Projection	Scale
2012-07-03	KarBen		
Checked	Appr.		

FLEXIT®

POWER DISTRIBUTION BOARD

A4

Replaces:	Replaced by:
	342264

Lay-out Mountain

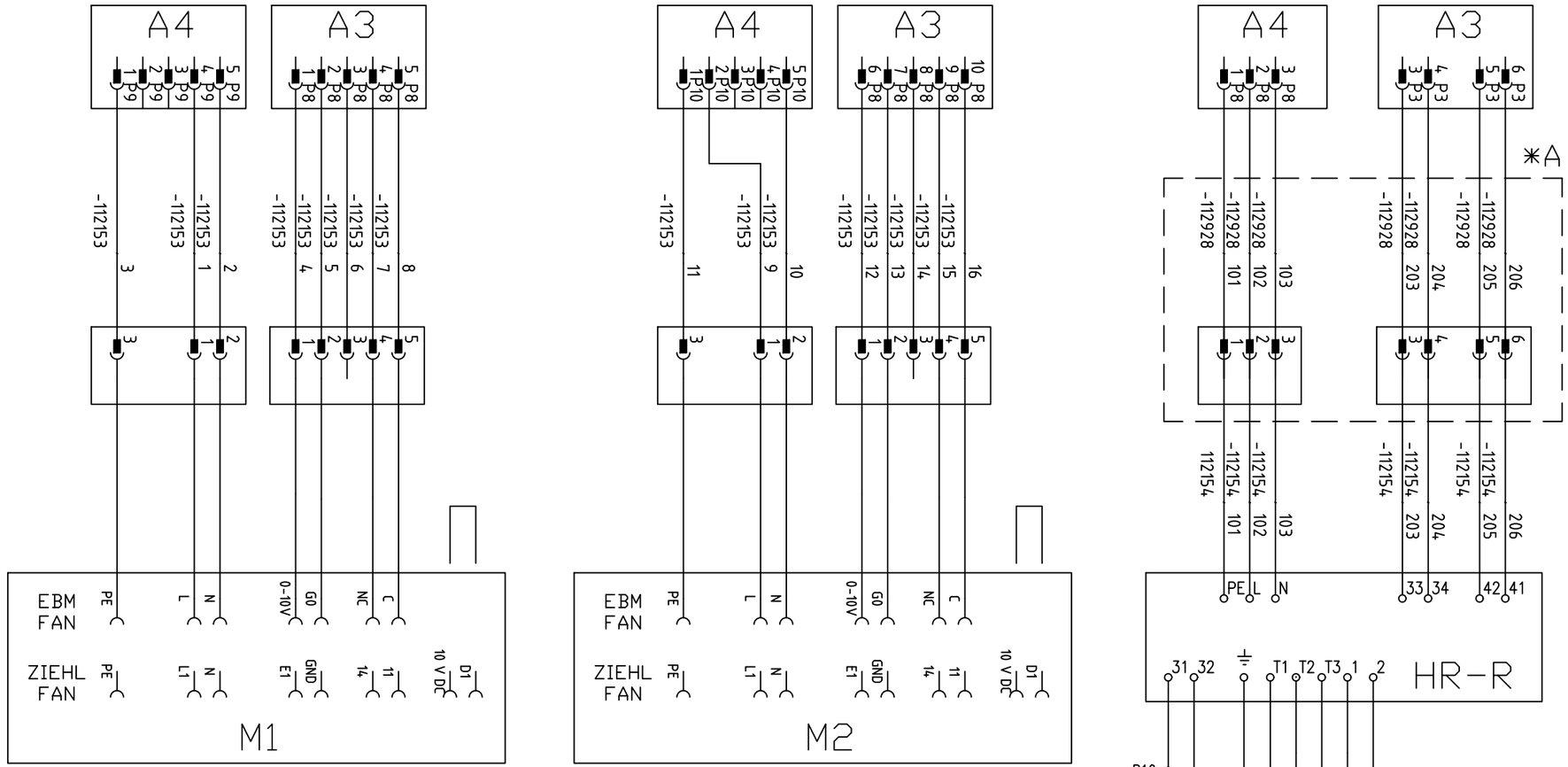

DESCRIPTION	S10	L14/S15	L20/S20	L26	L32/S32
M1	470W	470W	715W	1350W	1350W
M2	470W	470W	715W	1350W	1350W
HR-R	25W	40W	40W	40W	40W

A3

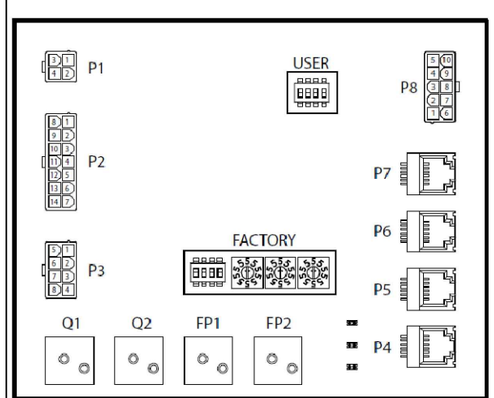

A4

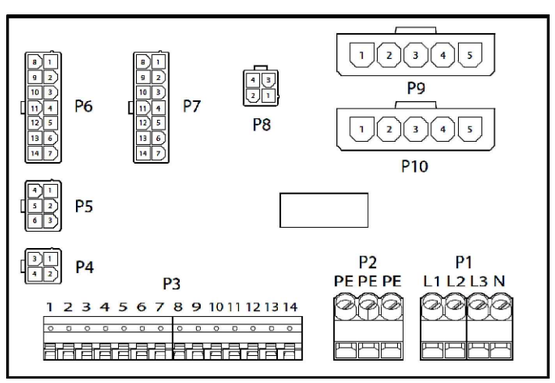

*A = Gjelder kun modeller i L-serien

Symb.	Changes	Date/Sign.
8	Monochrome PDF	160915/MAJ
7	DRAWING UPDATED	140321/TOE
6	DRAWING UPDATED	140313/TOE
5	DRAWING UPDATED	131128/TOE
4	DRAWING UPDATED	131017/LA
3	DRAWING UPDATED	130508/PAG

No. Unit	Pos. No.	Name, type, dim.	Drawing no. Standard	Art. No.	Matr. Spec.
Date 2012-07-03		Drawn KarBen	Projection	Scale	FLEXIT®
Checked		Appr.			

FANS + ROTOR
M1, M2 AND HR-R

Replaces: | Replaced by:

342265

Lay-out Moun'tain

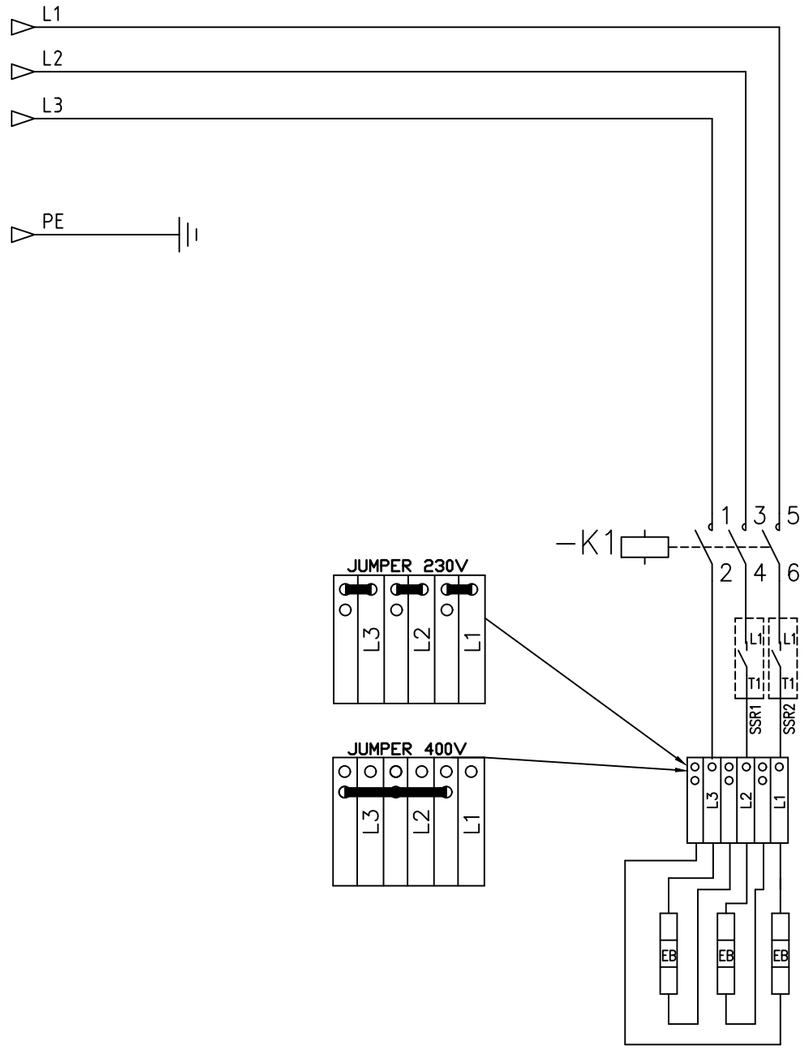

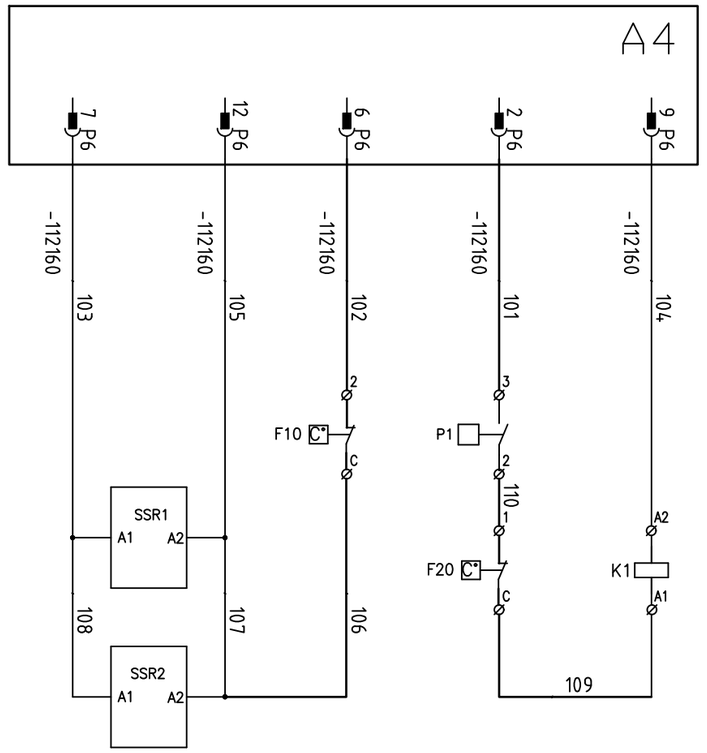

DESCRIPTION	S10	L14/S15	L20/S20	L26	L32/S32
EB	833W	1500W	1850W	2500W	3000W

A4

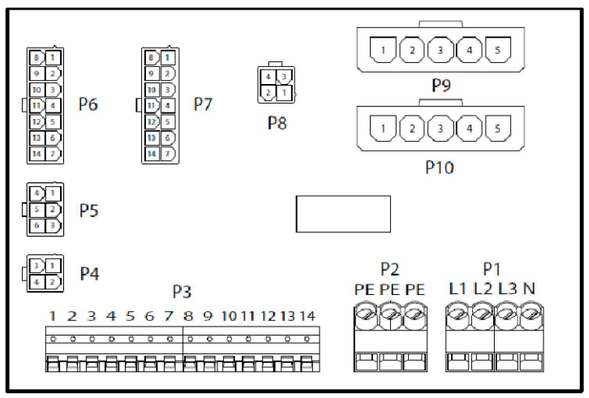

Symb.	Changes	Date/Sign.
5	Monochrome PDF	160915/MAJ
4	DRAWING UPDATED	131128/TOE
3	DRAWING UPDATED	130508/PAG
2	DRAWING UPDATED	130218/PAG

No. Unit	Pos. No.	Name, type, dim.	Drawing no. Standard	Art. No.	Matr. Spec.

Date	Drawn	Projection	Scale
2012-07-03	KarBen		
Checked	Appr.		

FLEXIT®

ELECTRIC HEATER

EB1

Replaces:	Replaced by:
342266	

Lay-out Mountain

DESCRIPTION	N	E	S	DK	SF
A1	*Regulator*	*Regulator*	*Regulator*	*Styresystem*	*Ohjausjärjestelmä*
A2	*Koblingskort*	*Connection board*	*Anslutningskort*	*Klemmekort*	*Riviliitinkortti*
A3	*Modbusextender*	*Modbus extender*	*Modbusextender*	*Modbusextender*	*Modbus-laajennin*
A4	*Strømforsyningskort*	*Power supply board*	*Strömförsörjningskort*	*Strømforsyningskort*	*Virransyöttökortti*
A5	*Styresignaler til rotor*	*Rotor controller*	*Rotorstyrning*	*Styresignaler til rotor*	*Roottorin ja lämpötila*
B1	*Temperaturføler, tilluft*	*Temperature sensor, supply air*	*Temperaturgivare, tilluft*	*Temperaturføler, indsugningsluft*	*Tuloilma-anturi*
B3	*Temperaturføler, avtrekk*	*Temperature sensor, extract air*	*Temperaturgivare, frånluft*	*Temperaturføler, udsugning*	*Lämpötila-anturi, poistoilma*
B4	*Temperaturføler, uteluft*	*Temperature sensor, outdoor air*	*Temperaturgivare, uteluft*	*Temperaturføler, udeluft*	*Lämpötila-anturi, ulkoilma*
B5	*Returvannsføler vannbatteri*	*Returnwater sensor, water battery*	*Returvattengivare, vattenbatteri*	*Temperaturføler, vandvarmeflade*	*Lämpötila-anturi, vesipatteri*
DA1	*Avkastspjeld*	*Exhaust air damper*	*Avluftsspjäll*	*Spjæld, udsugningsluft*	*Sulkupelti, poistoilma*
DA2	*Uteluftspjeld*	*Outside air damper*	*Uteluftsspjäll*	*Spjæld, udeluft*	*Sulkupelti, ulkoilma*
EB1	*Ettervarmebatteri, elektrisk*	*Heating battery, electrical*	*Eftervärmebatteri, elektriskt*	*Eftervarmeflade, elektrisk*	*Lämmityspatteri, sähkö*
F1	*Sikring*	*Fuse*	*Säkring*	*Sikring*	*Sulake*
F10	*Overopphetningstermostat EB1 Manuell reset*	*Thermostat overheating EB1 Manual reset*	*Överhettningstermostat EB1 Manuell återställning*	*Overophedningstermostat EB1 Manuel resetfunktion*	*Ylilämpötermostaatti EB1 Manuaalinen nollaus*
F20	*Overhetningstermostat EB1 Automatisk reset*	*Thermostat overheating EB1 Automatic reset*	*Överhettningstermostat EB1 Automatisk återställning*	*Overophedningstermostat EB1 Automatisk reset*	*Termostaatti EB1 Automaattinen nollaus*
M1	*Tilluftsvifte*	*Supply air fan*	*Tilluftsfläkt*	*Indsugningsventilator*	*Tuloilmapuhallin*
M2	*Avtrekksvifte*	*Extract air fan*	*Frånluftsfläkt*	*Udsugningsventilator*	*Poistoilmapuhallin*
M4	*Rotormotor*	*Rotor motor*	*Rotormotor*	*Rotormotor*	*It-kiekon mootori*
P1	*Trykkvakt, EB1*	*Pressure Guard, EB1*	*Tryckvakt, EB1*	*Pressostat, EB1*	*Paine-eroanturi, EB1*
P10	*Rotorvakt*	*Rotation detector*	*Rotationsvakt*	*Rotations detektor*	*Pyöritys ilmaisin*
S1	*Styrepanel*	*Control panel*	*Styrpanel*	*Styrepanel*	*Ohjauspaneeli*
T1	*Transformator*	*Transformer*	*Transformator*	*Transformator*	*Muuntaja*
WB1	*Ettervarmebatteri, vann*	*Heating battery, water based*	*Eftervärmebatteri, vatten*	*Eftervarmeflade, vand*	*Lämmityspatteri, vesi*
X1	*Rekkeklemme, forsyning*	*Connector, supply voltage*	*Anslutningsplint, matning*	*Rækkeklemmer indgående forsyning*	*Riviliittimet – sisääntulevaa syöttöä varten*
X100	*ISDN skjøtekontakt*	*RJ45 contact*	*RJ45 skarvkontakt*	*RJ45-samlemuffe*	*RJ45-liitäntä*
X101	*RJ12 skjøtekontakt*	*RJ12 contact*	*RJ12 skarvkontakt*	*RJ12-samlemuffe*	*RJ12-liitäntä*
X102	*Skjøtekontakt*	*Contact*	*Skarvkontakt*	*Samlemuffe*	*Liitäntä*
E1, E2	*EMC-filter*	*EMC filter*	*EMC-filter*	*EMC-filter*	*EMC-suodatin*