EN

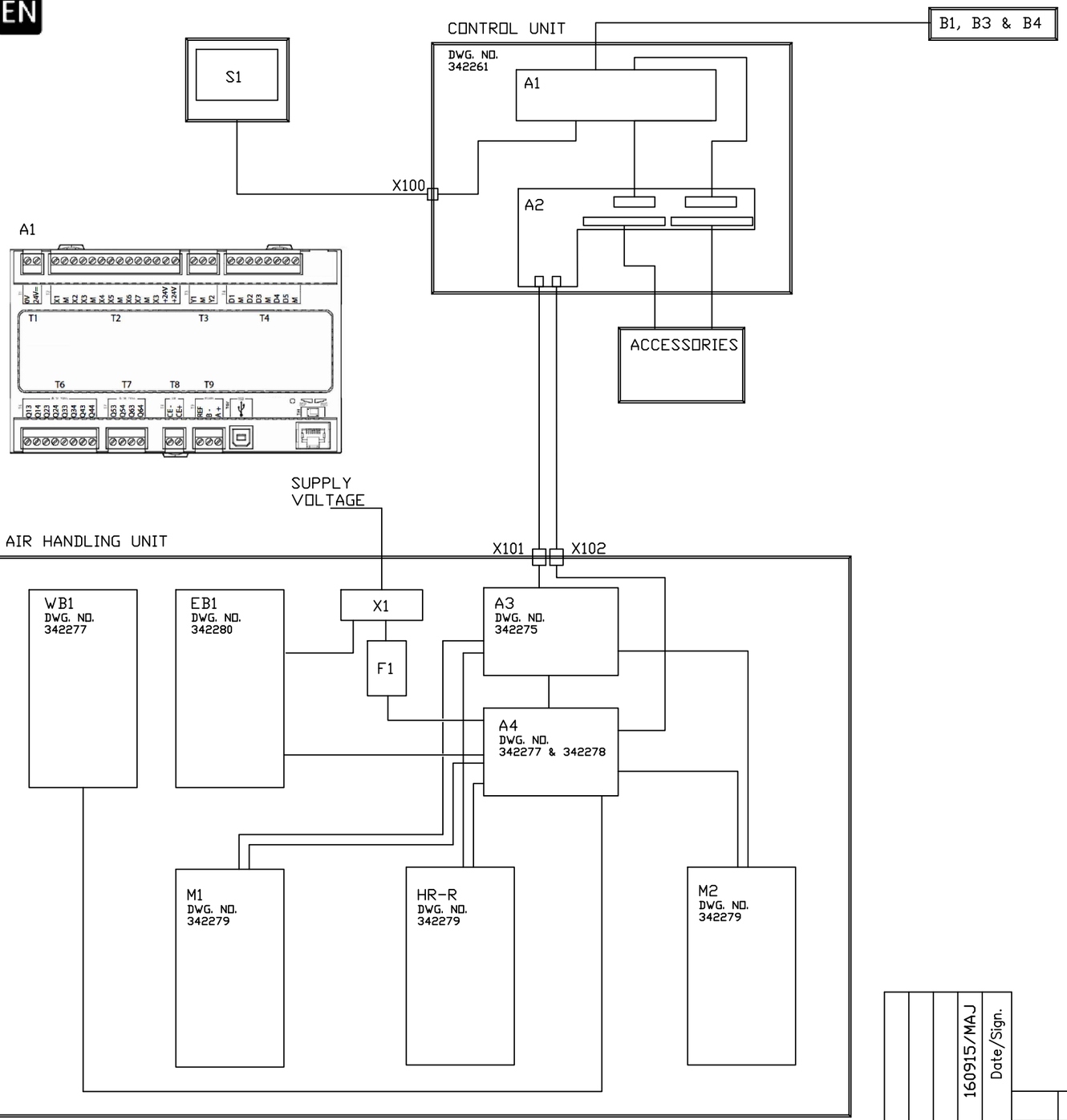

A2

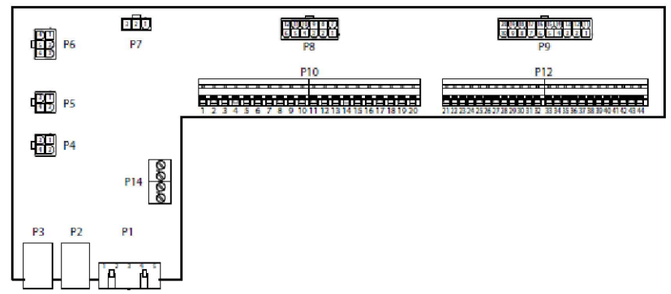

A3

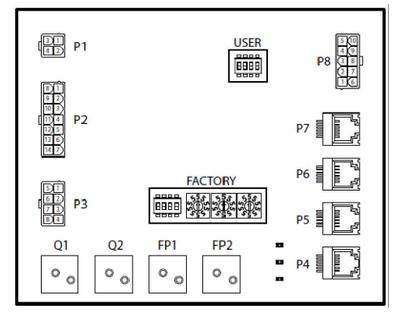

A4

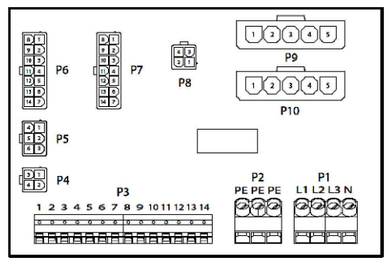

Symb.	Changes	Date/Sign.
1	Monochrome PDF	160915/MAJ

No. Unit	Pos. No.	Name, type, dim.	Drawing no. Standard	Art. No.	Matr. Spec.
Date 2014-02-10		Drawn TOE	Projection	Scale	FLEXIT
Checked		Appr.			

CONNECTION DIAGRAM
S50 & L50 400V
Art.nr. 113840

Replaces: | Replaced by:

342281

Lay-out Mountain

A2

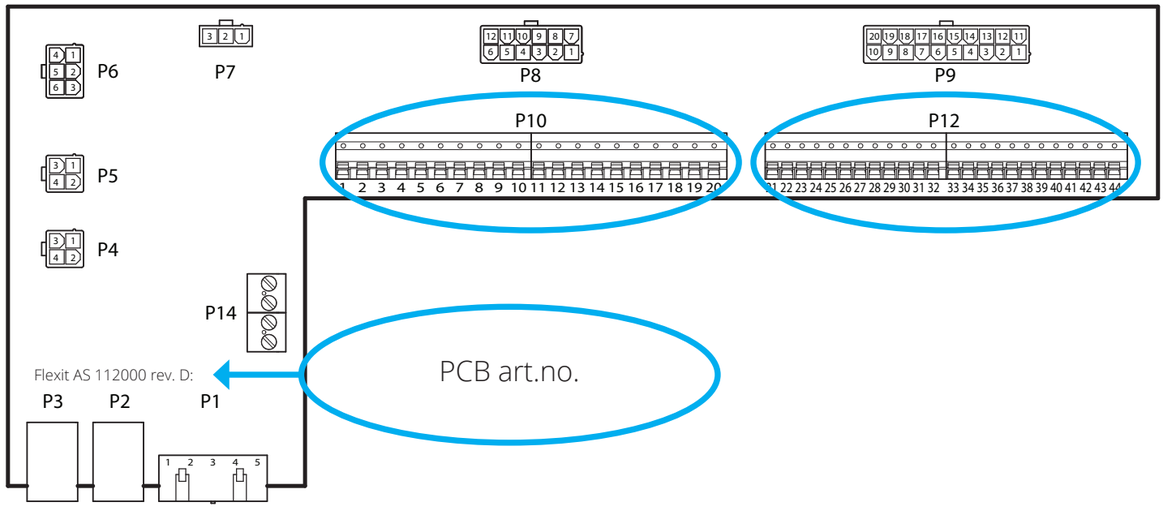

A4

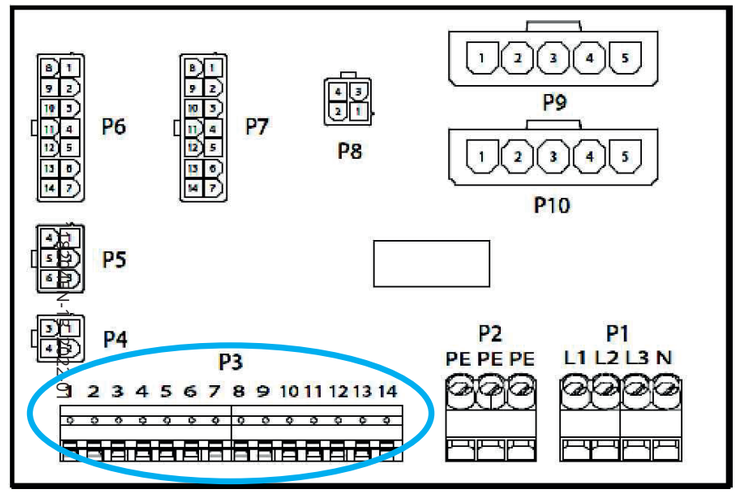

External accessories

Terminal block P10 has the following signals:

Block	Funktion	Description
1	L 230V	Power supply external accessories
2	N	Power supply external accessories
3	L 230V	Power supply outdoor air damper
4	L1 230V	Control signal outdoor air damper ON/OFF
5	N	Power supply outdoor air damper
6	L 230V	Power supply exhaust air damper
7	L1 230V	Control signal exhaust air damper ON/OFF
8	N	Power supply exhaust air damper
9	L 230V	Power supply fire damper*
10	L1 230V	Control signal fire damper ON/OFF*
11	N	Power supply fire damper*
12	Alarm IN	Pot.free contact alarm ON/OFF
13	Alarm OUT	Pot.free contact alarm ON/OFF
14	Cooling IN	Pot.free contact cooling (DX or Pump) ON/OFF
15	Cooling OUT	Pot.free contact cooling (DX or Pump) ON/OFF
16	L 230V	Power supply external accessories
17	Heating IN	Pot.free contact ext. heating (Elec./Water) ON/OFF
18	Heating OUT	Pot.free contact ext. heating (Elec./Water) ON/OFF
19	N	Power supply external accessories
20	Spare	Not used

*From PCB art.no. 112002:

9	C	Pot.free contakt Fire damperON/OFF
10	NO	Pot.free contakt Fire damperON/OFF
11	N/A	No connection

Terminal block P12 has the following signals:

Block	Funktion	Description
21	AO 0-10V	Control signal cooling (Valve or DX)
22	G0	Signal ground cooling
23	DI S1	Signal external speed control step 1
24	G0	Signal ground speed control step 1
25	DI S2	Signal external speed control step 2
26	G0	Signal ground speed control step 2
27	DI F/S	Signal Fire/Smoke input
28	G0	Signal ground Fire/Smoke input
29	AI 0-10V	Signal demand control (ex. CO_2)
30	G0	Signal ground demand control
31	AO 0-10V	Control signal external heateing (Elec./Water)
32	24VAC	Power supply external accessories
33	G0	Signal ground external heateing
34	DI FD O	Signal fire damper OPEN
35	DI FD L	Signal fire damper CLOSED
36	G0	Signal ground fire damper
37	AO 0-10V	Control signal AUX damper
38	G0	Signal ground AUX damper
39	DI/AI TEMP	Signal fire/frost sensor external heating
40	G0	Signal ground fire/frost sensor ext. heating
41	Bus -	KNX-bus SP65 Room sensor
42	Bus +	KNX-bus SP65 Room sensor
43	AI 0-10V	Control signal supply fan external (ex. VAV)
44	AI 0-10V	Control signal extract fan external (ex. VAV)

Circulation pump and valve motor

Terminal block P3 has the following signals:

Block	Funktion	Description
1	G0	Signal ground external accessories
2	24VAC	Power supply external accessories
3	G0	Signal ground valve motor internal water battery
4	AO 0-10V	Control signal valve motor internal water battery
5	G0	Signal ground fire/frost
6	DI FT	Signal fire termostat
7	AI FT	Signal frost sensor
8	Spare	Not used
9	N	Power supply external accessories
10	Heating OUT	Pot.fri contact circ.pump intern. water battery ON/OFF
11	Heating IN	Pot.fri contact circ.pump intern. water battery ON/OFF
12	L 230V	Power supply external accessories
13	N	Power supply external accessories
14	L 230V	Power supply external accessories

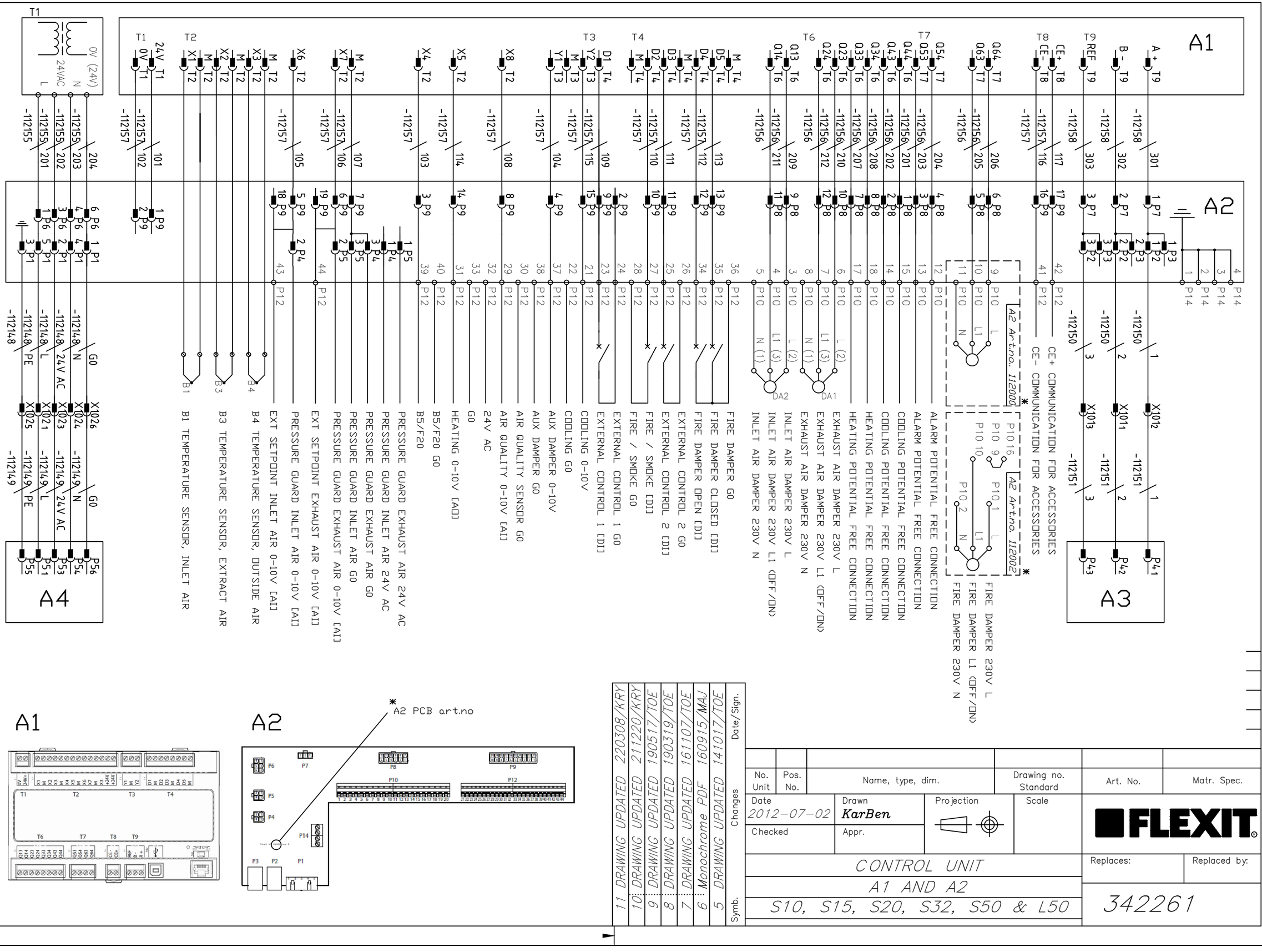
A1
A2
A3
A4
T1
T2
T3
T4
T6
T7
T8
T9
A + T9
B - T9
REF T9
CE+ T8
CE- T8
Q64 T7
Q63 T7
Q54 T7
Q53 T7
Q44 T6
Q43 T6
Q34 T6
Q33 T6
Q24 T6
Q23 T6
Q14 T6
Q13 T6
M T4
D1 T4
D2 T4
D3 T4
D4 T4
D5 T4
M T4
M T3
Y1 T3
Y2 T3
M T2
X1 T2
X2 T2
X3 T2
X4 T2
X5 T2
X6 T2
X7 T2
X8 T2
M T2
24V T1
0V T1
0V (24V)
24VAC
N
L
-112158
-112157
-112156
-112150
-112151
-112148
-112149
-112155
301
302
303
117
116
206
205
204
203
202
201
208
207
212
211
209
112
115
109
110
111
104
103
114
108
105
107
106
102
101
204
203
202
201
P1
P2
P3
P4
P5
P6
P7
P8
P9
P10
P12
P14
P41
P42
P43
P51
P53
P54
P55
P56
1 P7
2 P7
3 P7
17 P9
16 P9
42
41
12
9
10
11
6 P8
5 P8
4 P8
13
15
14
18
17
10
7
12
11
9
8
4
3
5
2
1
3 P9
14 P9
8 P9
5 P9
18 P9
19 P9
6 P9
7 P9
4 P9
15 P9
12 P9
9 P9
10 P9
11 P9
2 P9
1 P9
1 P5
1 P4
3 P5
2 P5
2 P4
1 P1
6 P6
4 P6
3 P6
2 P6
5 P6
1 P6
3 P1
1
2
3
4
5
6
7
8
9
10
11
12
13
15
16
17
18
19
20
21
22
23
24
25
26
27
28
29
30
31
32
33
34
35
36
37
38
39
40
43
44
X1011
X1012
X1013
X1021
X1023
X1024
X1025
X1026
G0
24V AC
L
N
PE
A2 Art.no. 112002
CE+ COMMUNICATION FOR ACCESSORIES
CE- COMMUNICATION FOR ACCESSORIES
ALARM POTENTIAL FREE CONNECTION
ALARM POTENTIAL FREE CONNECTION
COOLING POTENTIAL FREE CONNECTION
COOLING POTENTIAL FREE CONNECTION
HEATING POTENTIAL FREE CONNECTION
HEATING POTENTIAL FREE CONNECTION
EXHAUST AIR DAMPER 230V L
EXHAUST AIR DAMPER 230V L1 (OFF/ON)
EXHAUST AIR DAMPER 230V N
INLET AIR DAMPER 230V L
INLET AIR DAMPER 230V L1 (OFF/ON)
INLET AIR DAMPER 230V N
FIRE DAMPER GO
FIRE DAMPER CLOSED [DI]
FIRE DAMPER OPEN [DI]
EXTERNAL CONTROL 2 GO
EXTERNAL CONTROL 2 [DI]
FIRE / SMOKE [DI]
FIRE / SMOKE GO
EXTERNAL CONTROL 1 GO
EXTERNAL CONTROL 1 [DI]
FIRE DAMPER 230V L
FIRE DAMPER L1 (OFF/ON)
FIRE DAMPER 230V N
DA2
DA1
PRESSURE GUARD EXHAUST AIR 24V AC
PRESSURE GUARD INLET AIR 24V AC
PRESSURE GUARD EXHAUST AIR GO
PRESSURE GUARD INLET AIR GO
PRESSURE GUARD EXHAUST AIR 0-10V [AI]
EXT SETPOINT EXHAUST AIR 0-10V [AI]
PRESSURE GUARD INLET AIR 0-10V [AI]
EXT SETPOINT INLET AIR 0-10V [AI]
B1 TEMPERATURE SENSOR, INLET AIR
B3 TEMPERATURE SENSOR, EXTRACT AIR
B4 TEMPERATURE SENSOR, OUTSIDE AIR
B5/F20 0-10V [AO]
B5/F20 GO
HEATING 0-10V
G0
24V AC
AIR QUALITY 0-10V [AI]
AIR QUALITY SENSOR GO
AUX DAMPER 0-10V
AUX DAMPER GO
COOLING 0-10V
COOLING GO
EXTERNAL CONTROL 1 [DI]
EXTERNAL CONTROL 1 GO
FIRE / SMOKE GO
FIRE / SMOKE [DI]
EXTERNAL CONTROL 2 [DI]
EXTERNAL CONTROL 2 GO
FIRE DAMPER [DPEN [DI]
FIRE DAMPER CLOSED [DI]
FIRE DAMPER GO
B1
B3
B4
A2 PCB art.no
Date/Sign.
Changes
Symb.
11 DRAWING UPDATED 220308/KRY
10 DRAWING UPDATED 211220/KRY
9 DRAWING UPDATED 190517/TOE
8 DRAWING UPDATED 190319/TOE
7 DRAWING UPDATED 161107/TOE
6 Monochrome PDF 160915/MAJ
5 DRAWING UPDATED 141017/TOE
No. Unit
Pos. No.
Name, type, dim.
Drawing no. Standard
Art. No.
Matr. Spec.
Date 2012-07-02
Drawn KarBen
Projection
Scale
Checked
Appr.
FLEXIT
CONTROL UNIT
A1 AND A2
S10, S15, S20, S32, S50 & L50
Replaces:
Replaced by:
342261
Layout Mounting

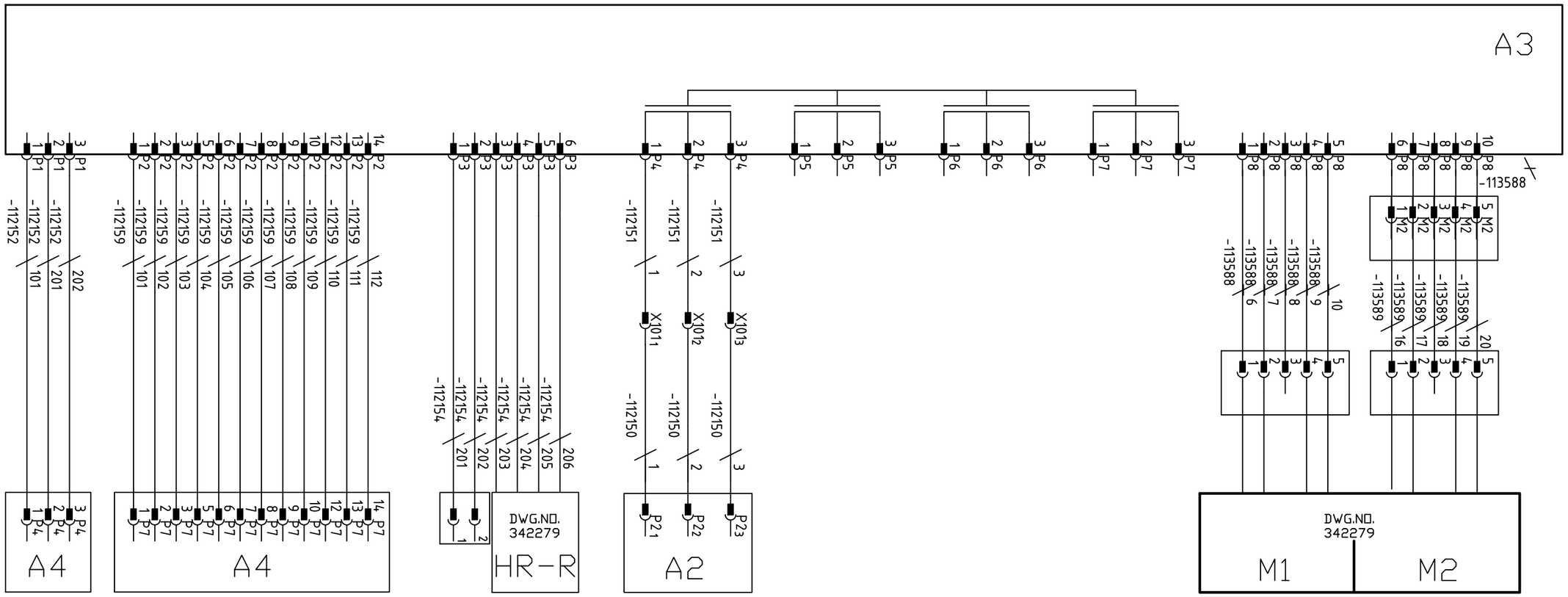

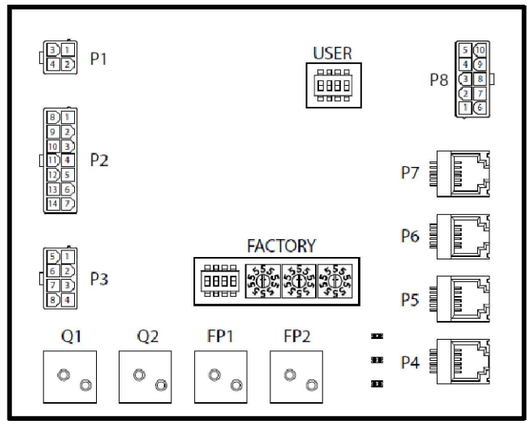

"USER" Dip switch

DIP Switch	ON	OFF	Remark
1	HEATING BATTERY	NO HEATING BATTERY	ON = HEATING BATTERY INSTALLED. OFF = NO HEATING BATTERY INSTALLED.
2	ELECTRICAL	WATER	TYPE OF HEATING BATTERY.
3	YES	NO	M1 MOTORVERN LASKET.
4	YES	NO	M2 MOTORVERN LASKET.

( ) = Factory setting

Symb.	Changes	Date/Sign.
1	Monochrome PDF	160915/MAJ

No. Unit	Pos. No.	Name, type, dim.	Drawing no. Standard	Art. No.	Matr. Spec.
Date 2014-02-10	Drawn TOE	Projection	Scale	FLEXIT	
Checked	Appr.				
MODBUS I/O-EXTENDER				Replaces:	Replaced by:
A3				342275	
S50 & L50					

Lay-out Mountain

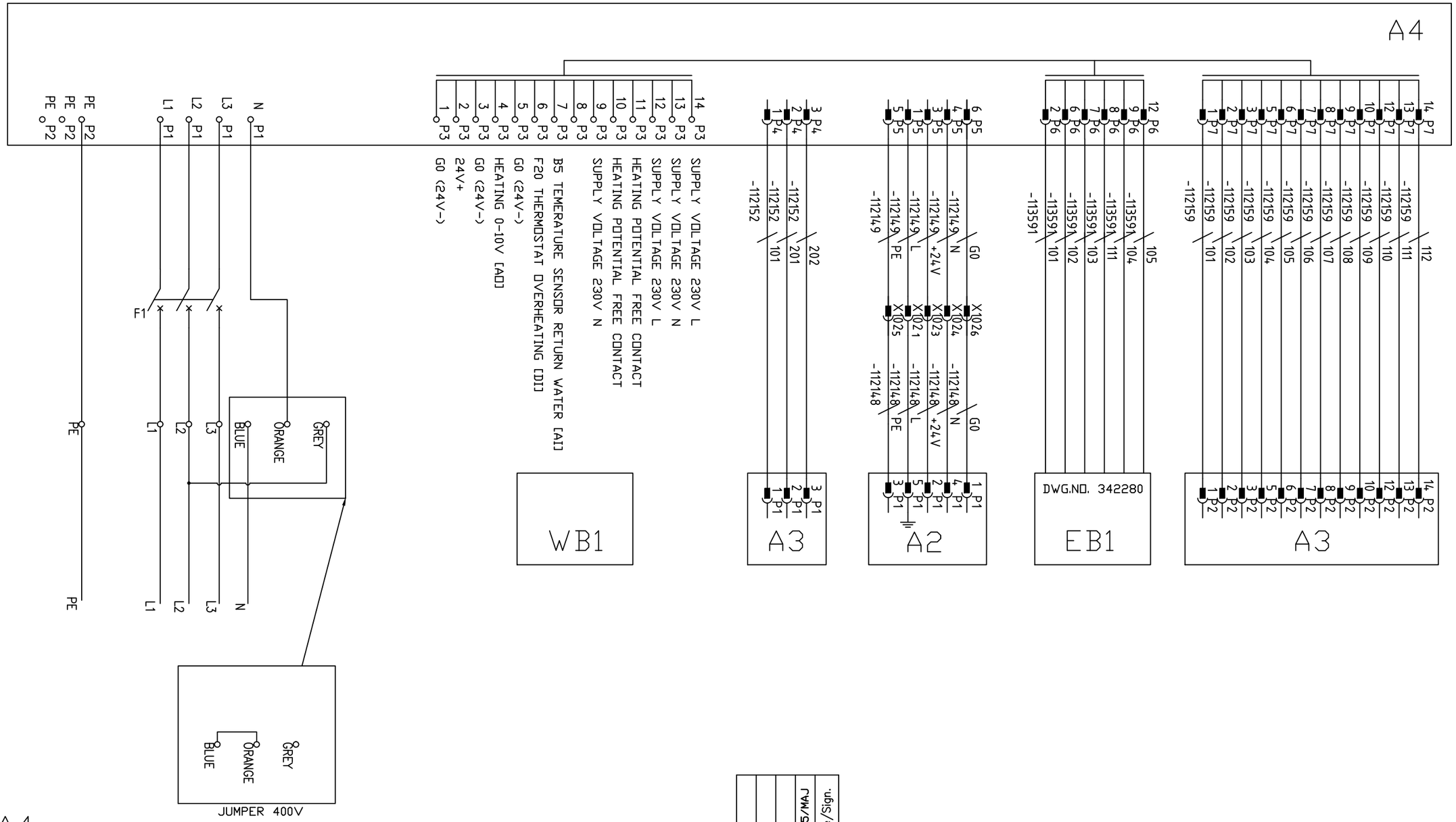

No. Unit	Pos. No.	Name, type, dim.	Drawing no. Standard	Art. No.	Matr. Spec.

Date	Drawn	Projection	Scale
2014-02-10	TOE		
Checked	Appr.		

FLEXIT®

POWER DISTRIBUTION BOARD

A4

S50 & L50 400V

Replaces:

Replaced by:

342277

Monochrome PDF 160915/MAJ

Symb. 1 Changes Date/Sign.

Lay-out Moun'tain

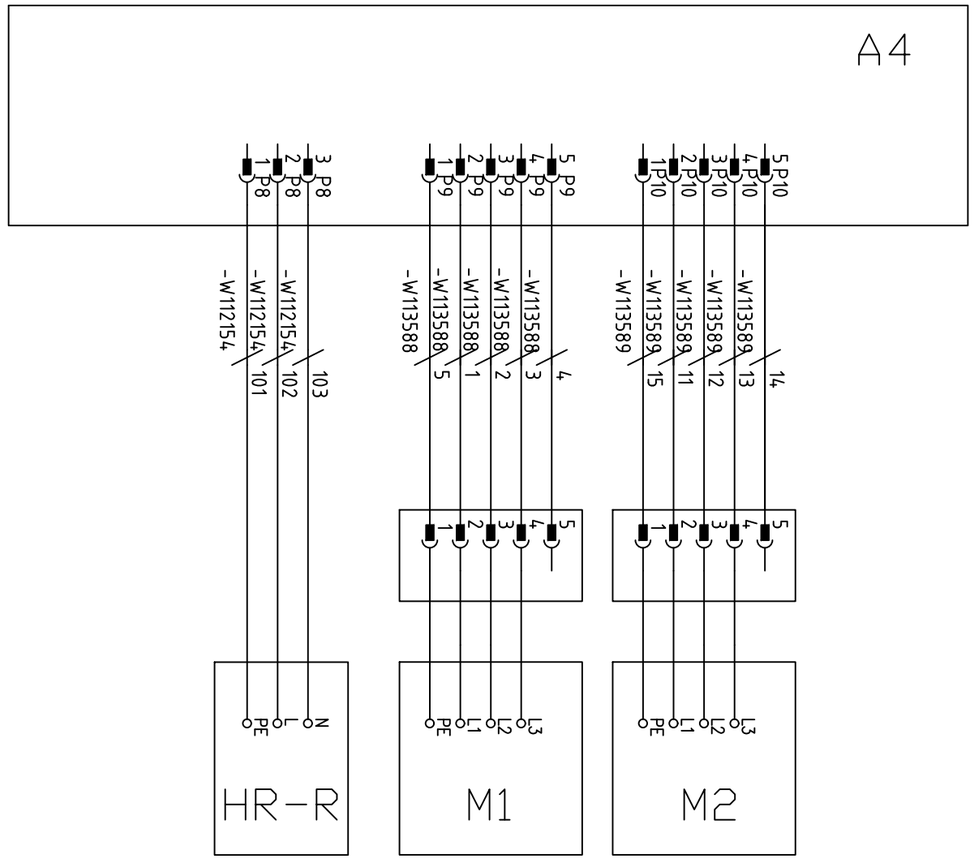

Symb.	Changes	Date/Sign.
1	Monochrome PDF	160915/MAJ

No. Unit	Pos. No.	Name, type, dim.	Drawing no. Standard	Art. No.	Matr. Spec.

Date	Drawn	Projection	Scale
2014-02-10	TOE		
Checked	Appr.		

FLEXIT®

POWER DISTRIBUTION BOARD

A4

S50 & L50

Replaces:	Replaced by:

342278

Lay-out Moun'tain

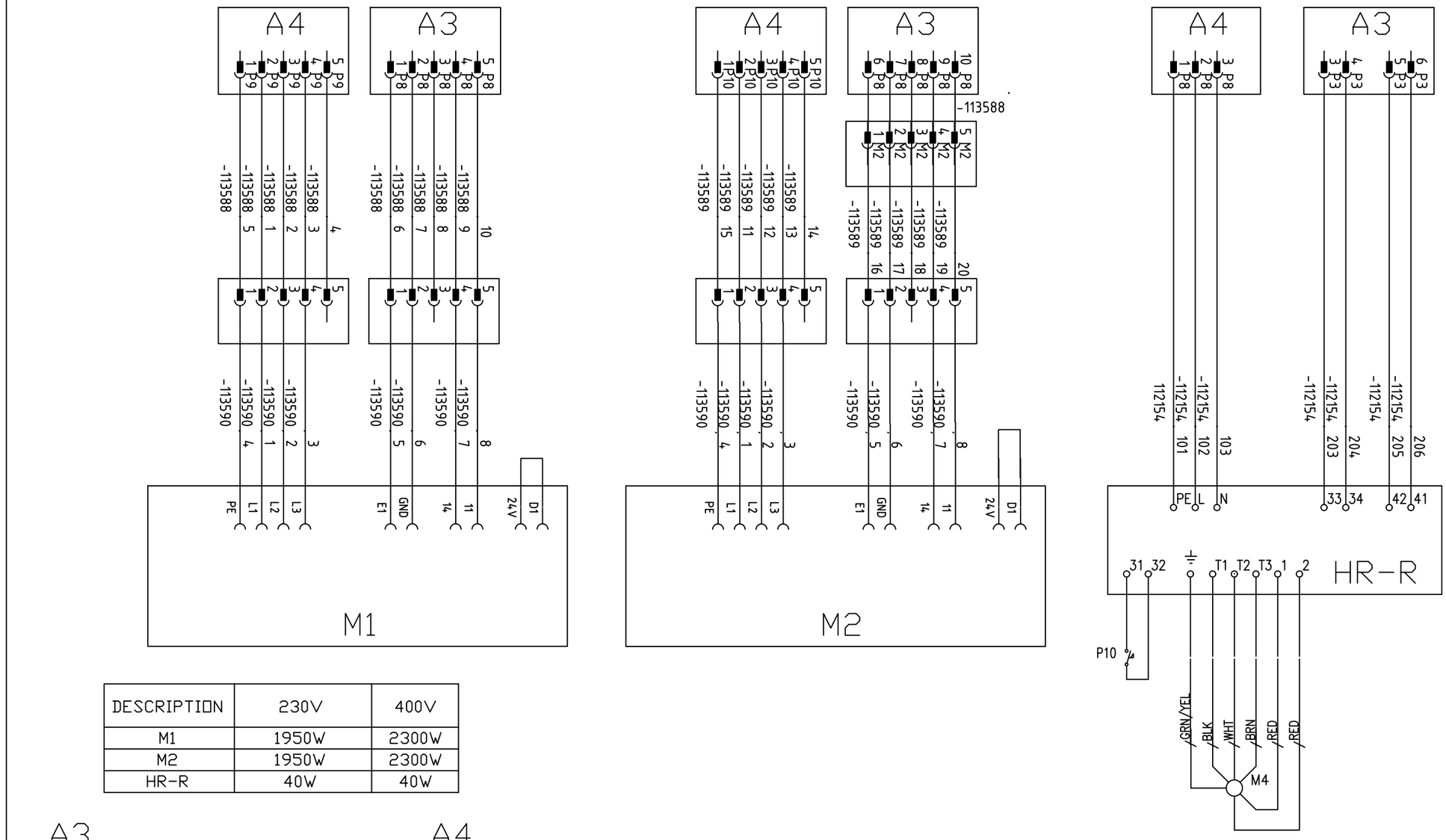

DESCRIPTION	230V	400V
M1	1950W	2300W
M2	1950W	2300W
HR-R	40W	40W

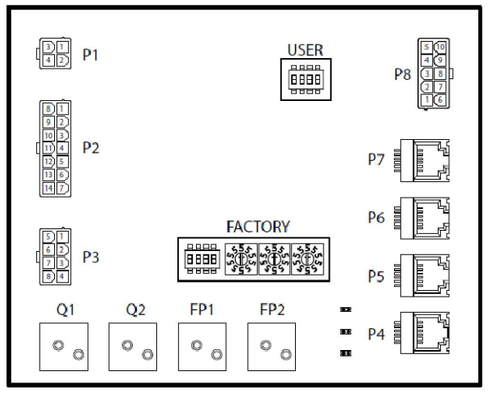

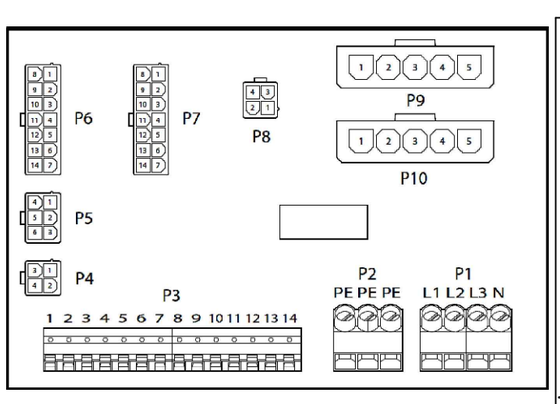

Symb.	1	Monochrome PDF	160915/MAJ
Changes			Date/Sign.

No. Unit	Pos. No.	Name, type, dim.	Drawing no. Standard	Art. No.	Matr. Spec.
Date 2014-02-10	Drawn TOE	Projection	Scale	FLEXIT®	
Checked	Appr.				

FANS + ROTOR
M1, M2 AND HR-R
S50 & L50

Replaces: 342279

Replaced by:

Lay-out Mountain

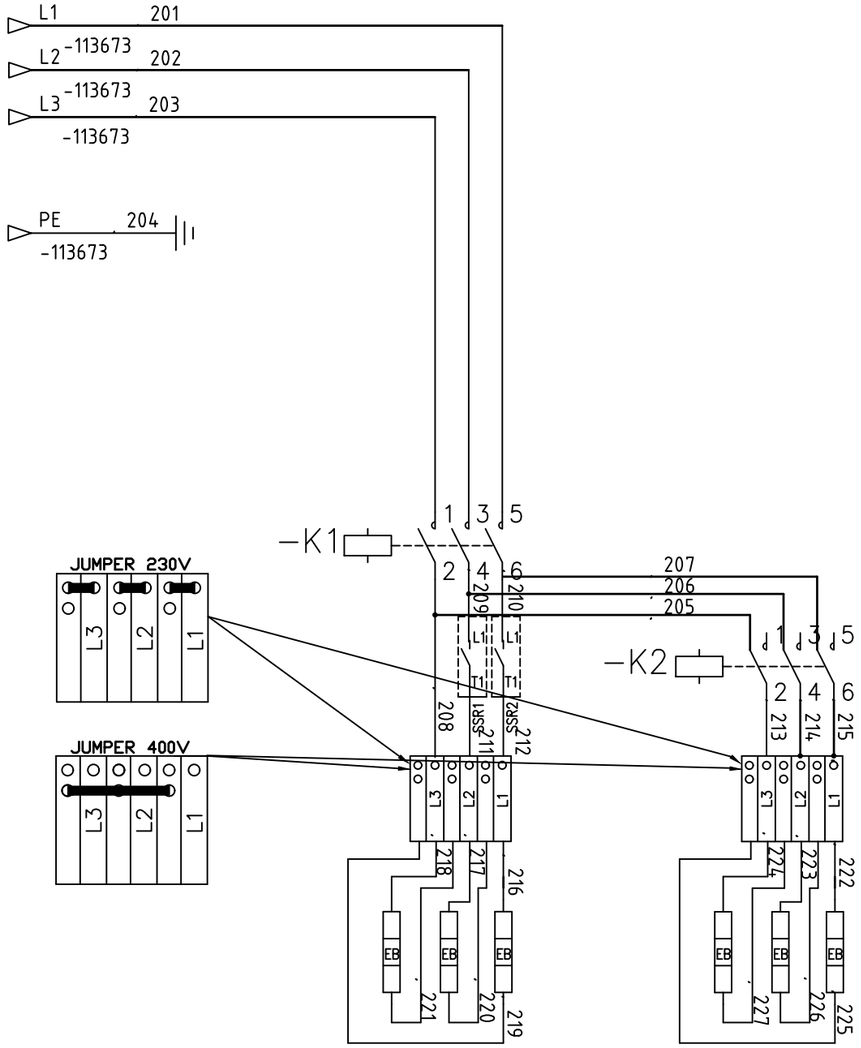

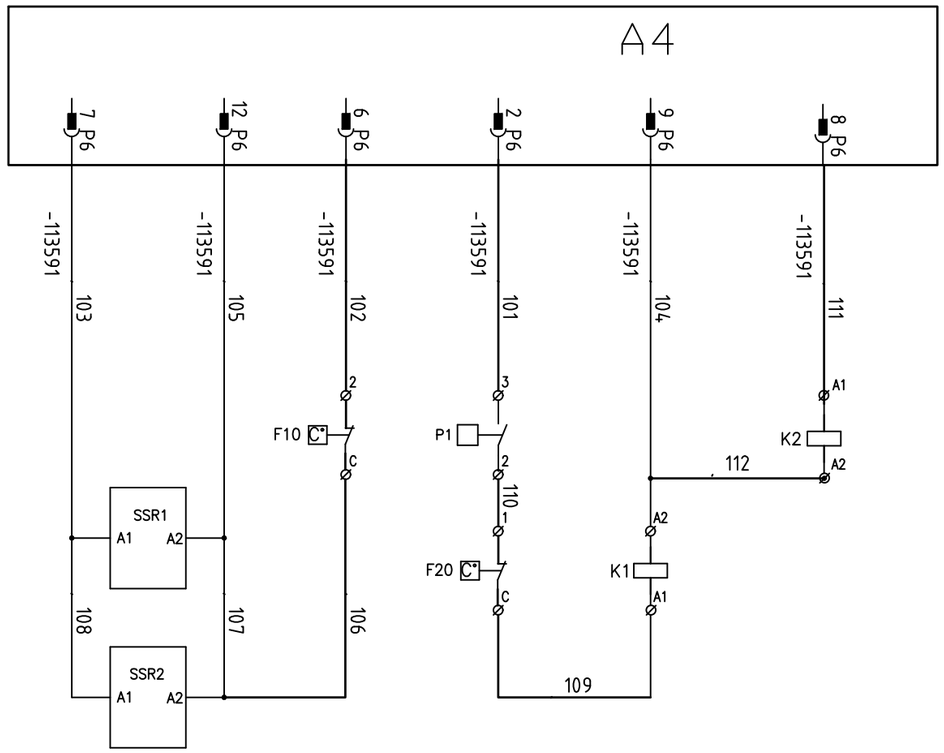

DESCRIPTION	
EB	2333W

A4

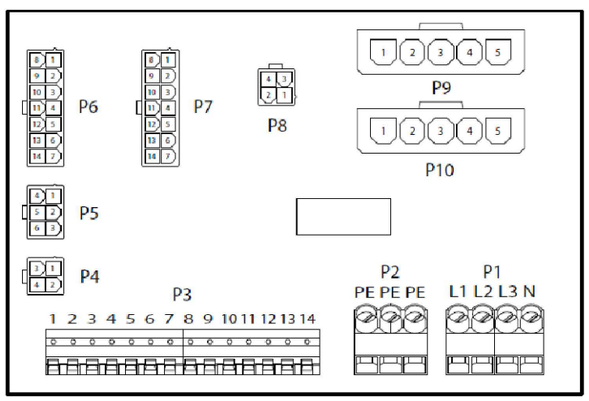

Symb.	Monochrome PDF	160915/MAJ	Changes	Date/Sign.
1				

No. Unit	Pos. No.	Name, type, dim.	Drawing no. Standard	Art. No.	Matr. Spec.
Date: 2014-02-10	Drawn: TOE	Projection	Scale	FLEXIT®	
Checked	Appr.			Replaces:	Replaced by:

ELECTRIC HEATER
EB1
S50 & L50

342280

Lay-out Mountain

DESCRIPTION	NO	EN	SV	DA	FI
A1	*Regulator*	*Regulator*	*Regulator*	*Styresystem*	*Ohjausjärjestelmä*
A2	*Koblingskort*	*Connection board*	*Anslutningskort*	*Klemmekort*	*Riviliitinkortti*
A3	*Modbusextender*	*Modbus extender*	*Modbusextender*	*Modbusextender*	*Modbus-laajennin*
A4	*Strømforsyningskort*	*Power supply board*	*Strömförsörjningskort*	*Strømforsyningskort*	*Virransyöttökortti*
A5	*Styresignaler til rotor*	*Rotor controller*	*Rotorstyrning*	*Styresignaler til rotor*	*Roottorin ja lämpötila*
B1	*Temperaturføler, tilluft*	*Temperature sensor, supply air*	*Temperaturgivare, tilluft*	*Temperaturføler, indsugningsluft*	*Tuloilma-anturi*
B3	*Temperaturføler, avtrekk*	*Temperature sensor, extract air*	*Temperaturgivare, frånluft*	*Temperaturføler, udsugning*	*Lämpötila-anturi, poistoilma*
B4	*Temperaturføler, uteluft*	*Temperature sensor, outdoor air*	*Temperaturgivare, uteluft*	*Temperaturføler, udeluft*	*Lämpötila-anturi, ulkoilma*
B5	*Returvannsføler vannbatteri*	*Returnwater sensor, water battery*	*Returvattengivare, vattenbatteri*	*Temperaturføler, vandvarmeflade*	*Lämpötila-anturi, vesipatteri*
DA1	*Avkastspjeld*	*Exhaust air damper*	*Avluftsspjäll*	*Spjæld, udsugningsluft*	*Sulkupelti, poistoilma*
DA2	*Uteluftspjeld*	*Outside air damper*	*Uteluftsspjäll*	*Spjæld, udeluft*	*Sulkupelti, ulkoilma*
EB1	*Ettervarmebatteri, elektrisk*	*Heating battery, electrical*	*Eftervärmebatteri, elektriskt*	*Eftervarmeflade, elektrisk*	*Lämmityspatteri, sähkö*
F1	*Sikring*	*Fuse*	*Säkring*	*Sikring*	*Sulake*
F10	*Overopphetningstermostat EB1* *Manuell reset*	*Thermostat overheating EB1* *Manual reset*	*Överhettningstermostat EB1* *Manuell återställning*	*Overophedningstermostat EB1* *Manuel resetfunktion*	*Ylilämpötermostaatti EB1* *Manuaalinen nollaus*
F20	*Overhetningstermostat EB1* *Automatisk reset*	*Thermostat overheating EB1* *Automatic reset*	*Överhettningstermostat EB1* *Automatisk återställning*	*Overophedningstermostat EB1* *Automatisk reset*	*Termostaatti EB1* *Automaattinen nollaus*
M1	*Tilluftsvifte*	*Supply air fan*	*Tilluftsfläkt*	*Indsugningsventilator*	*Tuloilmapuhallin*
M2	*Avtrekksvifte*	*Extract air fan*	*Frånluftsfläkt*	*Udsugningsventilator*	*Poistoilmapuhallin*
M4	*Rotormotor*	*Rotor motor*	*Rotormotor*	*Rotormotor*	*It-kiekon mootori*
P1	*Trykkvakt, EB1*	*Pressure Guard, EB1*	*Tryckvakt, EB1*	*Pressostat, EB1*	*Paine-eroanturi, EB1*
P10	*Rotorvakt*	*Rotation detector*	*Rotationsvakt*	*Rotations detektor*	*Pyöritys ilmaisin*
S1	*Styrepanel*	*Control panel*	*Styrpanel*	*Styrepanel*	*Ohjauspaneeli*
T1	*Transformator*	*Transformer*	*Transformator*	*Transformator*	*Muuntaja*
WB1	*Ettervarmebatteri, vann*	*Heating battery, water based*	*Eftervärmebatteri, vatten*	*Eftervarmeflade, vand*	*Lämmityspatteri, vesi*
X1	*Rekkeklemme, forsyning*	*Connector, supply voltage*	*Anslutningsplint, matning*	*Rækkeklemmer indgående forsyning*	*Riviliittimet – sisääntulevaa syöttöä varten*
X100	*ISDN skjøtekontakt*	*RJ45 contact*	*RJ45 skarvkontakt*	*RJ45-samlemuffe*	*RJ45-liitäntä*
X101	*RJ12 skjøtekontakt*	*RJ12 contact*	*RJ12 skarvkontakt*	*RJ12-samlemuffe*	*RJ12-liitäntä*
X102	*Skjøtekontakt*	*Contact*	*Skarvkontakt*	*Samlemuffe*	*Liitäntä*
E1, E2	*EMC-filter*	*EMC filter*	*EMC-filter*	*EMC-filter*	*EMC-suodatin*