FLEXIT

118041EN-04
2025-01



Nordic

ART.NO. 116670, 116671, 116672, 121179, 121180

EN

INSTALLATION INSTRUCTIONS

Heating coil water

Contents

1. Water heating coil intended for heating of ventilation air 4
2. System drawing 5
   2.1. CL-series 5
   2.2. S-series 6
   2.3. L-series 7
3. Technical data 8
   3.1. General 8
4. Plumbing 9
   4.1. Location of the water heating element 9
5. Dimensions 12
6. Electrical work 15
7. Return water sensor (B5) 18
8. Wiring diagram 18
9. Configuration 20
10. Maintenance 20
11. Accessories 21
12. Frost safety function in the ventilation system control system 22

For units without electrical heating coils, refer to the guidelines under discontinued models for units.

All electrical connections must be installed by qualified electricians.

Our products are subject to continuous development and we therefore reserve the right to make changes.
We also disclaim liability for any printing errors that may occur.

1. Water heating coil intended for heating of ventilation air

Content heating coil water

- Heating coil water
- Cable set
- B5 return water sensor, with isolation and cable ties.
- Long NTC sensor (B1) for installation after the heating coil
- Wago clips
- Cable ties



Heating coil water

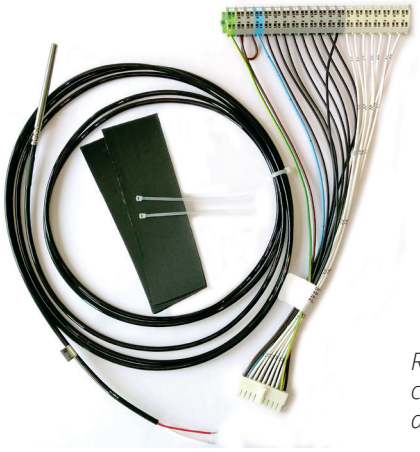



Return water sensor (B5) with insulation, cable harness, NTC sensor, Wago clips and cable ties.

Accessories:

- Shunt valve
- Shunt valve motor
- Air damper
- Circulationspump (not in Flexits sortiment)

See complete overview with art.no. i chap.11. Accessories on page 21.

Symbols	Pump	Non-return valve
Shuntvalve with motor	Water heating coil	Grille
Air damper with spring loaded closing		
Commissioning valve	B1 Temperature sensor	B5 Return water sensor

2. System drawing

2.1. CL-SERIES

The ventilation system must be connected to a damper with motor and spring loaded closing. We recommend dampers on both outdoor air and exhaust air, minimum on outdoor air. This prevents freezing in case of loss of heat source/power failure.

The water system shall be provided with a return water sensor (B5) and a circulation pump to maintain freezing protection function. Shunt valve regulates heat to the supply air.

See the installation manuals to the appropriate unit for further guidance.

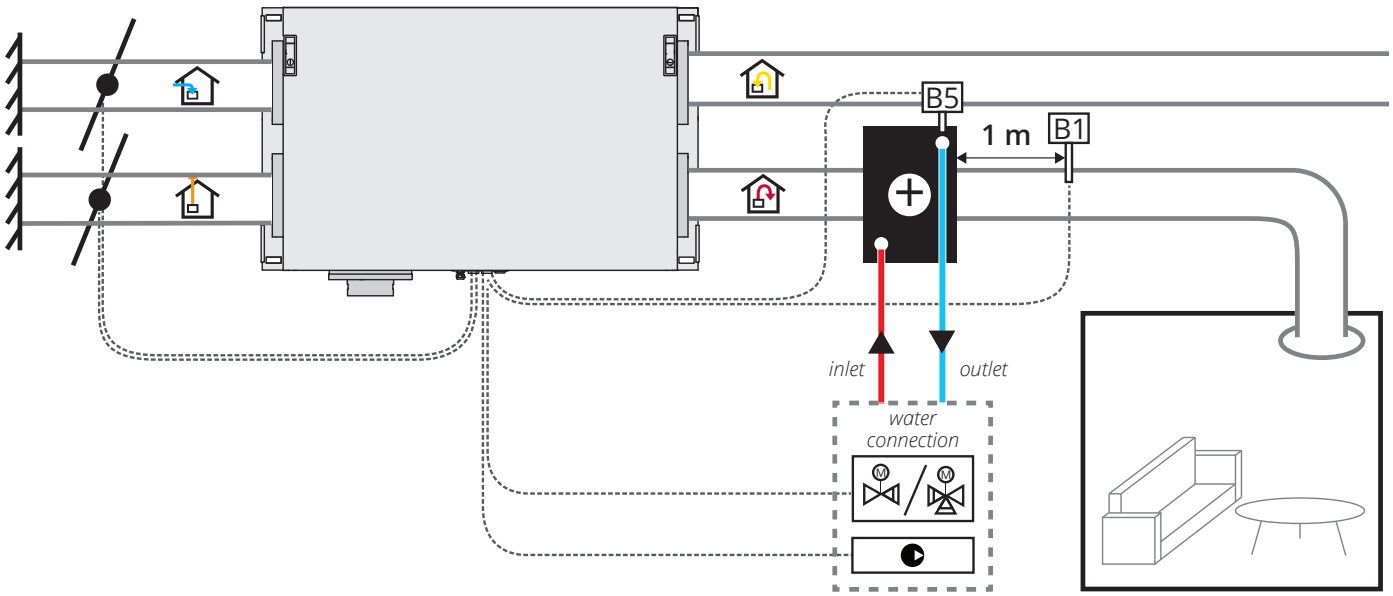



Supply air | *Extract air* | *Exhaust air* | *Outdoor air* | *Danger! Electricity* | *Danger! Do not touch*

2.2. S-SERIES

The ventilation system must be connected to a damper with motor and spring loaded closing. We recommend dampers on both outdoor air and exhaust air, minimum on outdoor air. This prevents freezing in case of loss of heat source/power failure.

The water system shall be provided with a return water sensor (B5) and a circulation pump to maintain freezing protection function. Shunt valve regulates heat to the supply air.

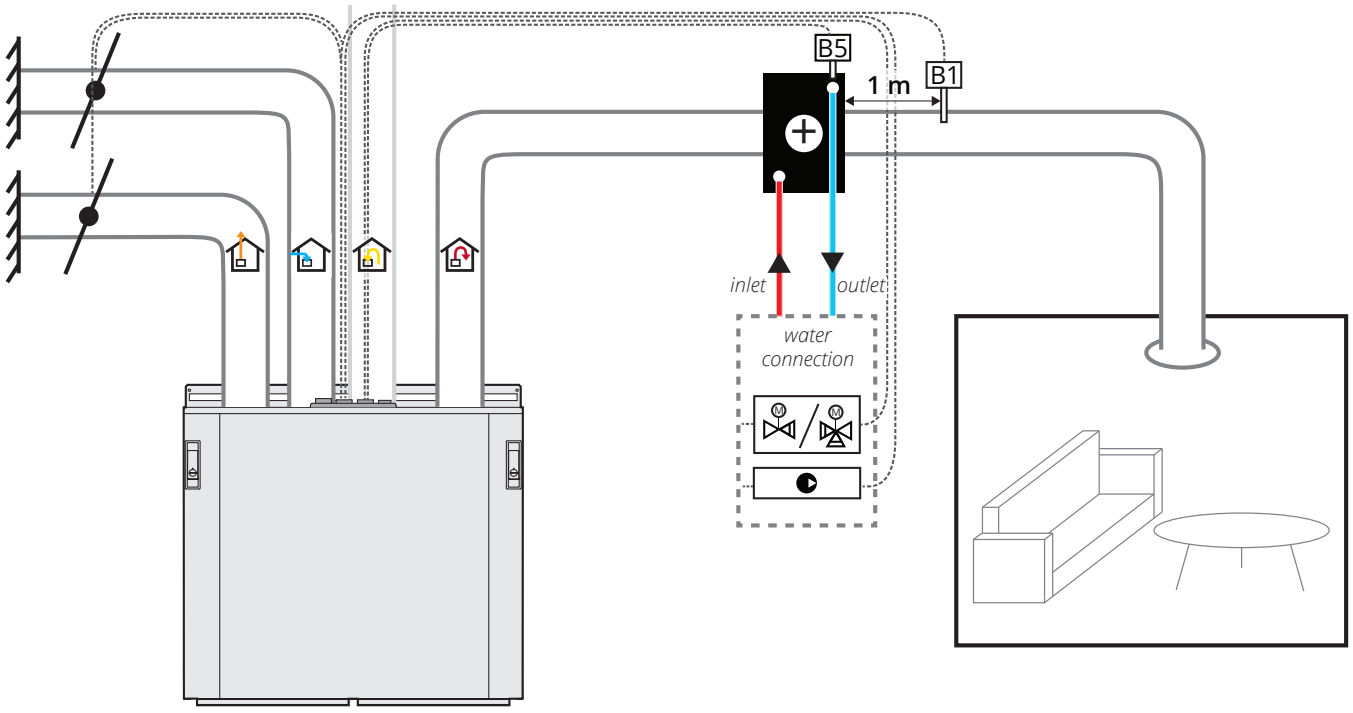

See the installation manuals to the appropriate unit for further guidance.



Supply air | *Extract air* | *Exhaust air* | *Outdoor air* | *Danger! Electricity* | *Danger! Do not touch*

2.3. L-SERIES

The ventilation system must be connected to a damper with motor and spring loaded closing. We recommend dampers on both outdoor air and exhaust air, minimum on outdoor air. This prevents freezing in case of loss of heat source/power failure.

The water system shall be provided with a return water sensor (B5) and a circulation pump to maintain freezing protection function. Shunt valve regulates heat to the supply air.

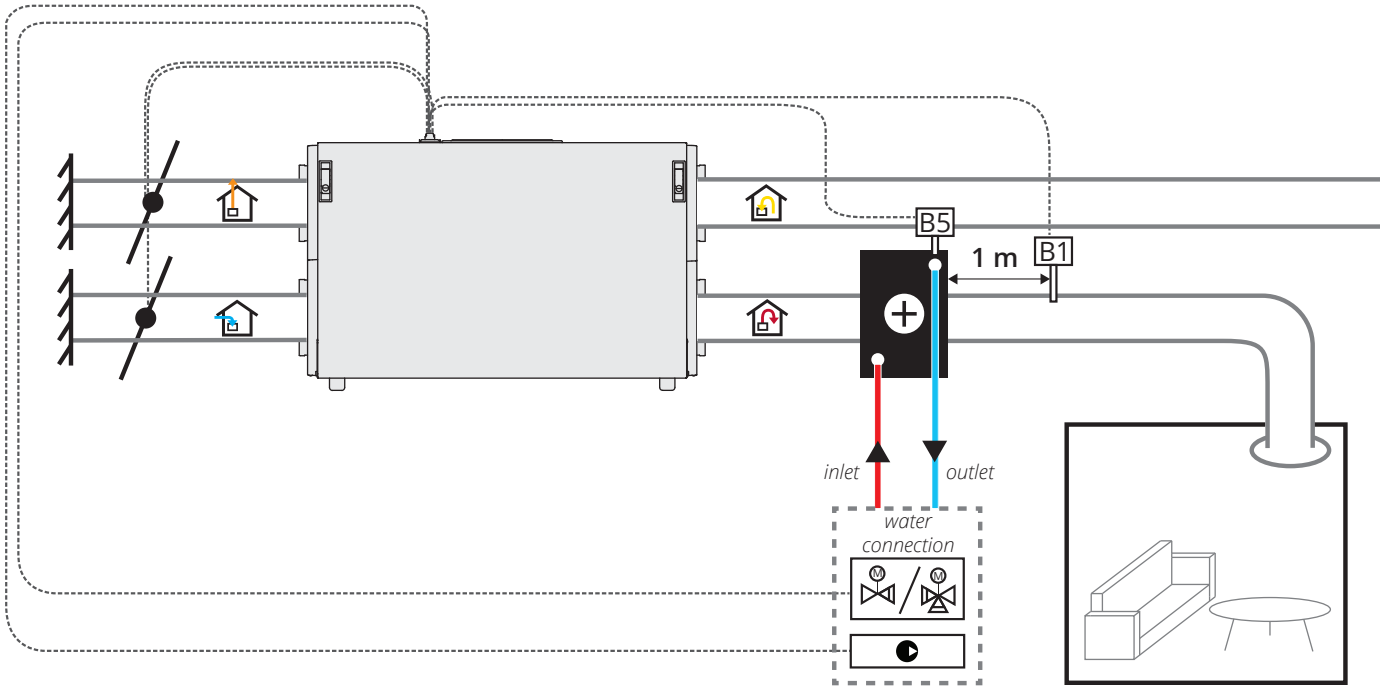

See the installation manuals to the appropriate unit for further guidance.



Supply air | *Extract air* | *Exhaust air* | *Outdoor air* | *Danger! Electricity* | *Danger! Do not touch*

3. Technical data

3.1. GENERAL

Design data from calculation of table.
Outside temperature -25 °C
Inside temperature + 20 °C

For each shunt valve there is a KV_S-value (capacity value in m³/h):
K_v - Valve coefficient specified as water flow in m³/h at a pressure drop across a fully open valve at 1 bar (100 kPa) calculated.

$$m^3/h\ K_V = 36 \frac{q\ (l/s)}{\sqrt{\Delta P(kPa)}}$$

Use Flexit's calculation program for correct sizing of the water heating coil.

For more information, see www.flexit.com

For water heating elements, constant flow is preferable (see example connection A and B). Then there is always circulation in the heating coil and it avoids that stagnant water freezes at low temperature. It has a circulating pump in the heating coil circuit.

Since we do not have this information about the facilities we have chosen to provide the choice of 3-way valve with valve authority at a given pressure drop. The pressure drop is chosen as high as possible but with a about 50% valve authority. Guide for 3-way valves may therefore be seen as examples that apply under given conditions. It is therefore important that the plumber check the choice of shuntvalves and make the necessary adjustment of the current facility.

The valve should be selected so the minimum is 50% valve authority. This is important for the valve to give any effect when it regulates.

Valve authority: The pressure drop across the valve relative to both the pressure drop across the valve + pressure drop in the flow circuit.

4. Plumbing

All plumbing must be carried out by an authorised plumber.
Place the unit/water coil near a gully to prevent damage in case of a water leakage.

4.1. LOCATION OF THE WATER HEATING ELEMENT

The duct coil is mounted after the ventilation unit on to the supply air duct. Follow these directions to position the heating coil correct (See fig. 1 and 2). The element must be placed with a good distance to potential duct bends, to avoid uneven air flow above the element.

Counter flow:
Heating coils should always be connected so that water runs counterflow relative to the airflow (the water shall move towards the air) see product labeling. This is important to achieve the correct function.

AIR HANDLING UNIT:

WARNING! Before commencing installation, pull out the mains plug and wait 2 mins before opening the door.

Before opening the door: The product must be set to service mode and powered off because the unit contains elements that must not be touched when hot. Refer to the user manual for FlexitGO.

NB! Please consider service accessibility before commencing installation.

Fig. 1

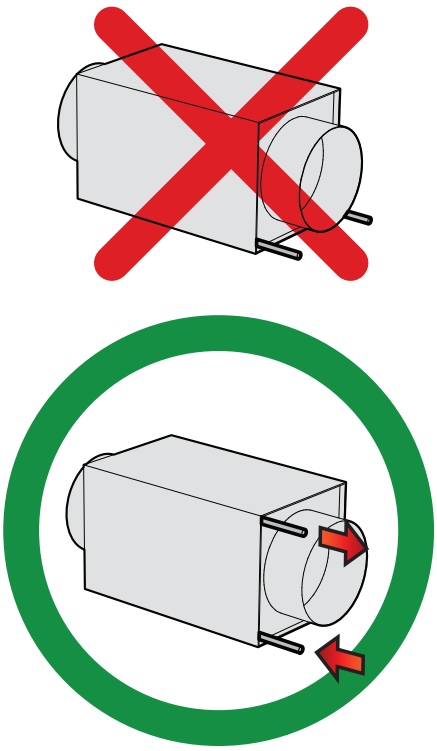

When installing horizontally, incoming water shall be connected to the lower pipe. Do not place the element so that both pipes positions at the bottom, or at the top.

Fig. 2

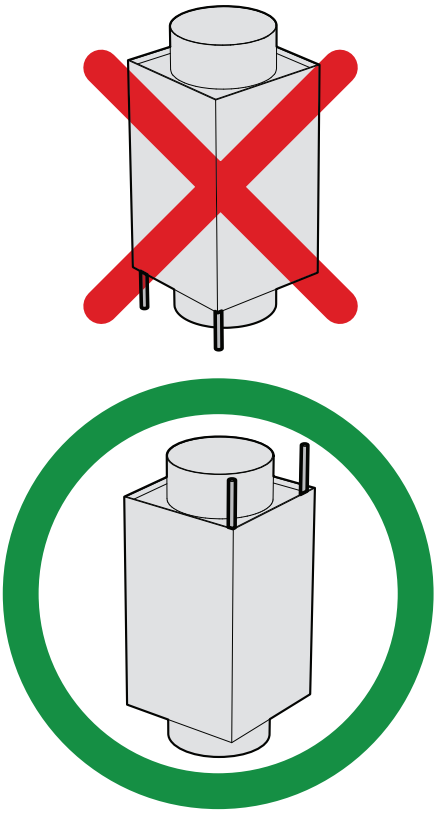

When installing vertically, the connection pipes for water, must face upwards.

Venting

Remember to connect the T piece for venting, at the highest point in the circuit.

Frost risk

A spring loaded shutting damper must be connected to the outdoor and exhaust air duct. This prevents cold air current on the element upon system outage, which in turn might lead to frost damages.

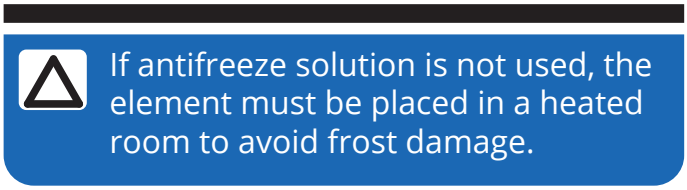





Connections

The water supply must be at the bottom of the water heating coil, the return must be on the top. See product labeling.

Place the shuntvalve as close as possible to the water heating coil (preferably max 2m). Note that many valve motors can operate in both directions, and that this can be controlled on the motor itself. Adjust it so that the valve opens on a rising 0-10V signal.

Upon connecting to the pipe system, the follwoing points must be considered:

- The connection pipes must not be subjected to torsion or bending.
- Ensure that neither expansion forces in the system nor the weight of the system itself strain the connections.
- Check the system for potential leakage after filling it with water.

Example

Connection A - Norwegian connection

Shunt with 3-way valve which works with constant flow in primary and secondary circuit. The 3-way valve is mounted on the secondary side and does not affect the primary system. Primary flow might be higher than the secondary flow. This connection assumes that the temperature in primary and secondary circuit is the same. The connection is common for air coil in Norway.

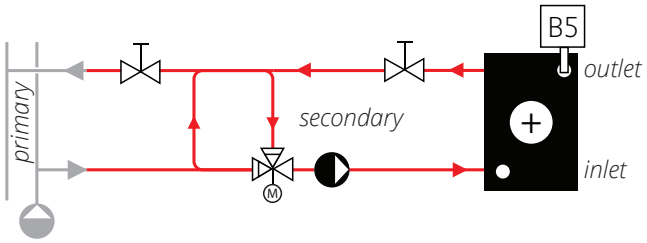

The K_V value should be chosen so that it gets min. 50% valve authority.

Example

Connection B - Swedish connection

Shunt with 3-way valve which works with constant flow in primary and secondary circuit. You may have higher flow in the secondary circuit and a small temperature loss. This connection is often applied in heating systems with their own heating source. (Ex. boiler system)

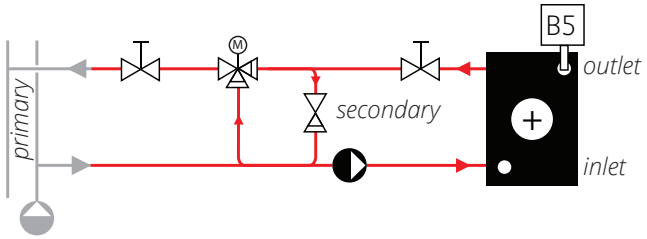

The K_V value should be chosen so that it gets min. 50% valve authority.

Example

Connection C - 2-way connection

Shunt with 2-way valve which works with variable flow in primary circuit and constant flow in secondary circuit. Use the connection when you want variable flow in primary circuit and high temperature loss. The connection is often used with long-distance heating when you want low returntemperature.

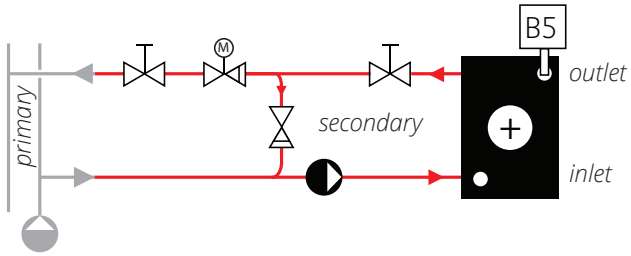

The K_V value should be chosen so that it gets min. 50% valve authority.

5. Dimensions

Type A, Ø160, art.no. 116670

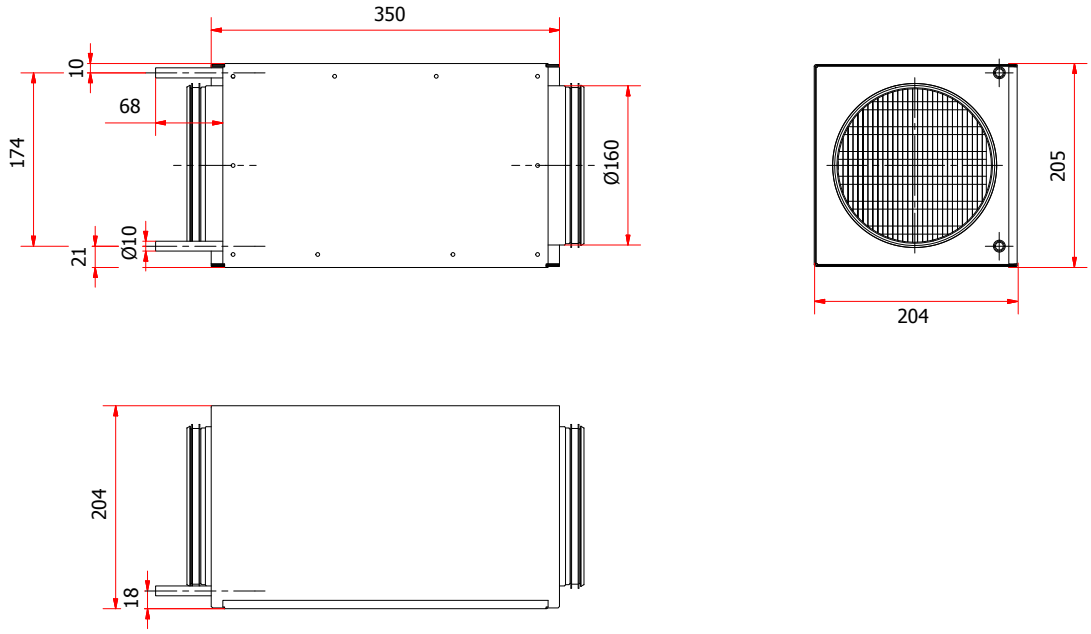

Type B, Ø160, art.no. 116671

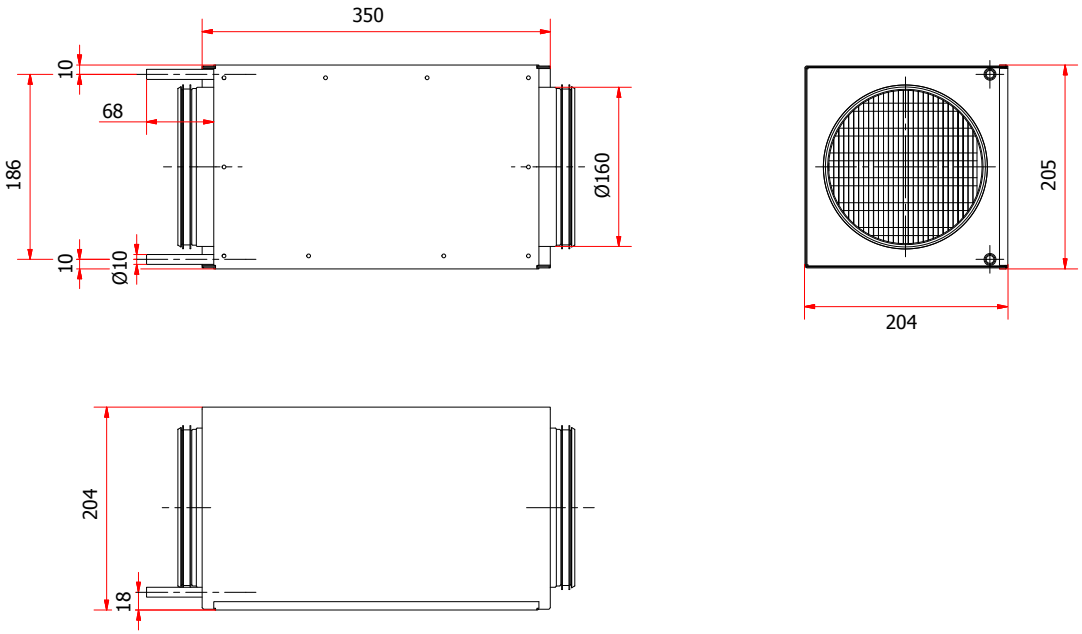

Type C, Ø160, art.no. 116672

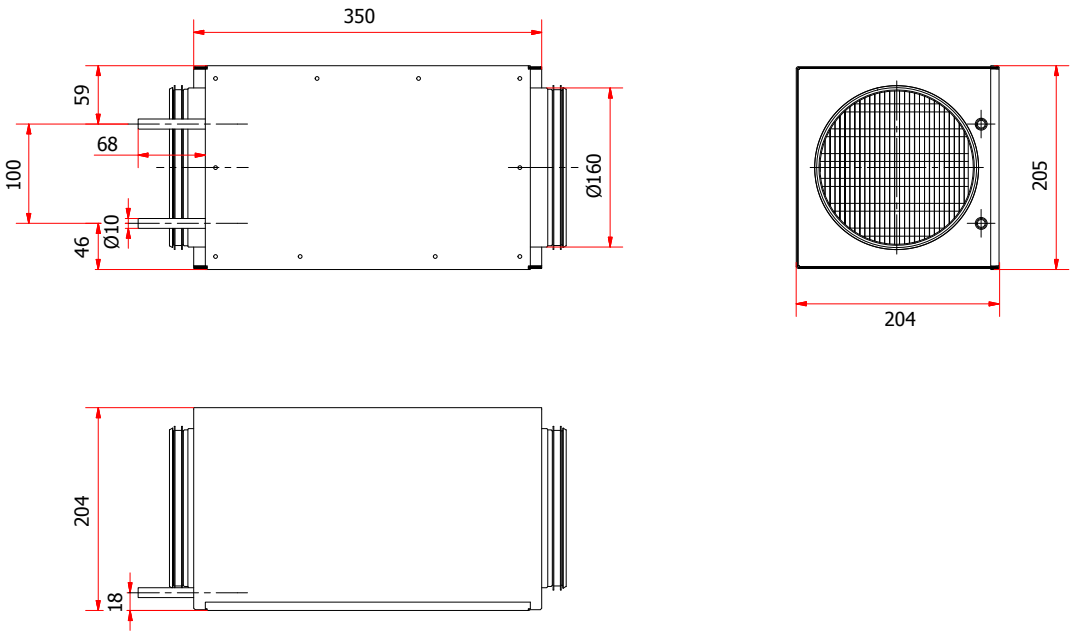

Type D, Ø200, art.no. 121179

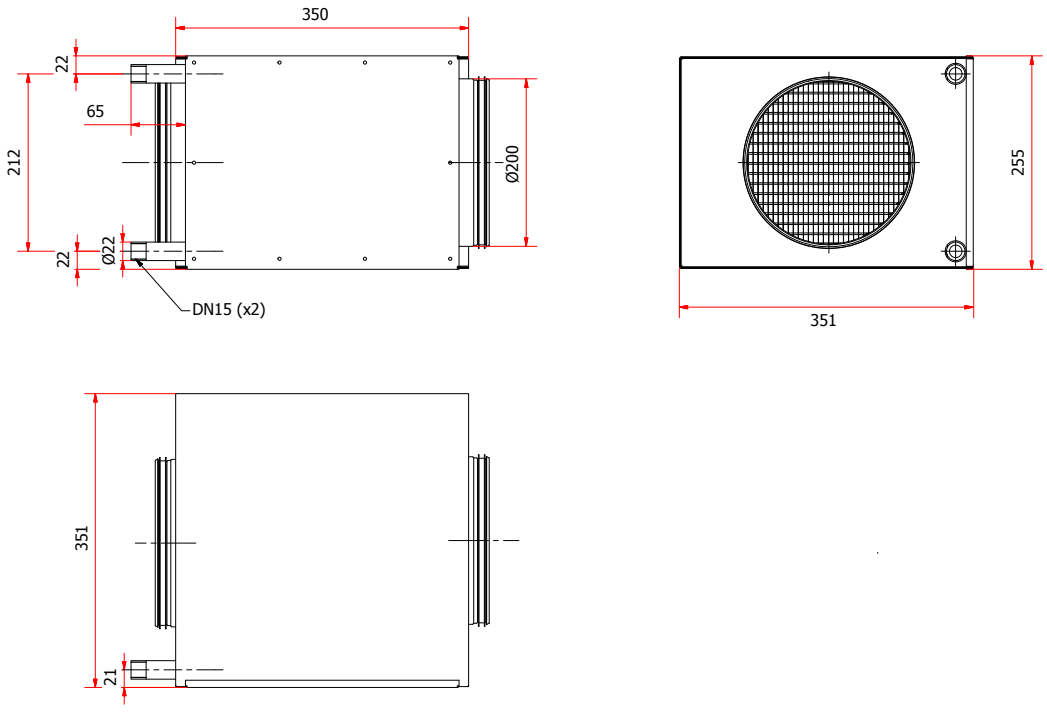

Type E, Ø200, art.no. 121180

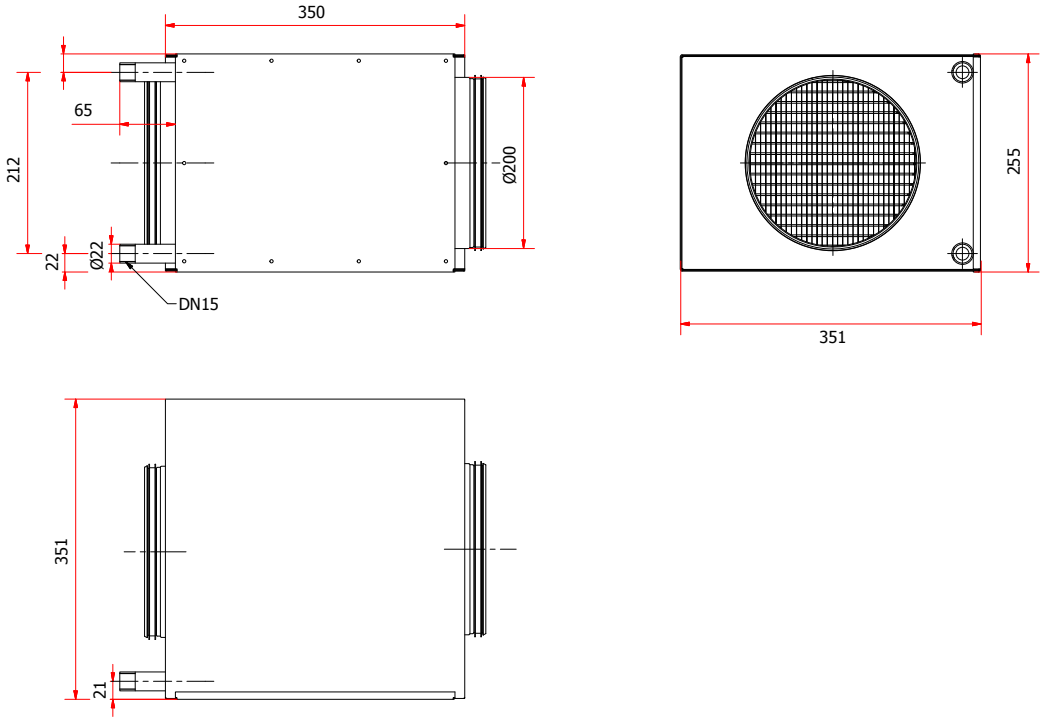

6. Electrical work

All electrical connections must be installed by qualified electricians.

1

Remove the cover of the electrical compartment.

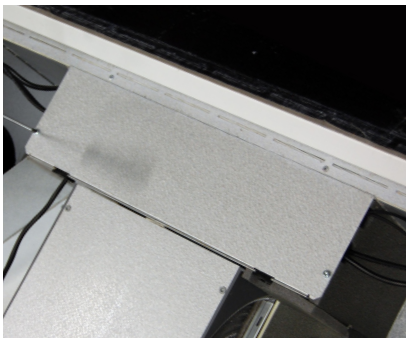

CL-unit

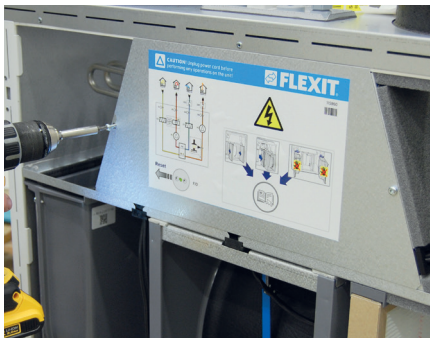

S-unit

L-unit

2

Cut off the cable ties and disconnect the electric heater contacts **(NB: 2 contacts)**.

NB: The electric heater must be disconnected because the same outputs are used by the pump in the water coil configuration.

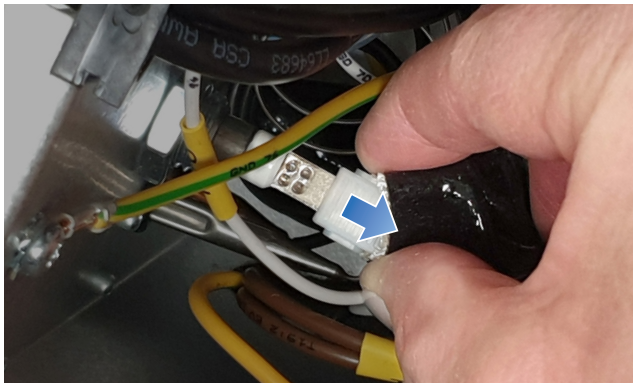

3

To avoid short-circuit, the protective sleeves on the electric heater contacts (2) must be fixed with cable ties.



4

Disconnect the alarm cables from the fire thermostat (F10).
NOTE! The two white cables.
NOTE! Older units only have the two alarm cables (White).
NOTE! These must be disconnected as it is the same input used for the return water sensor B5.



6

Locate the temperature sensor (B1), cut the cable ties needed to release the sensor, and pull it into the electrical room. Then, cut it off and splice on the included temperature sensor using the provided Wago connectors. Lead the temperature sensor out through the available opening at the top of the unit.

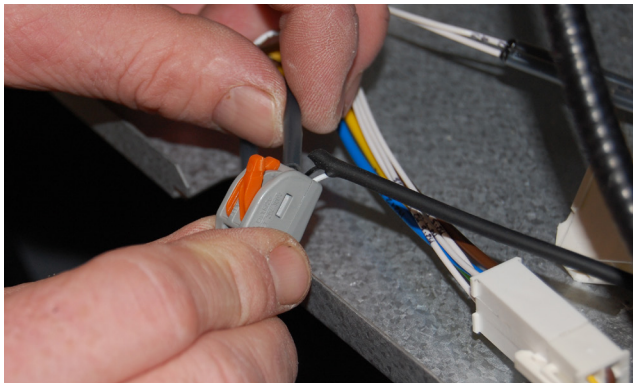

7

Connect all cables to the terminal block before placing it in a suitable location in the electrical compartment.

Nordic S4: Connect all cables to the terminal block before pressing it into the holes on the electrical compartment wall.
Nordic L6: Connect all cables to the terminal block before placing it in position above the circuit board.

See chap. 8. Wiring diagram.



8

Connect the contacts in the electrical compartment.

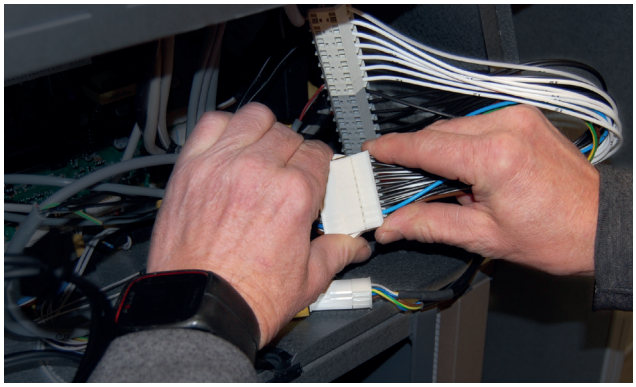

9

Temperature sensor B1 must be placed after the heating coil.



Place the sensor in the supply air duct (refer to label on top of the ventilation unit), approximately 1m away from the the heating coil. The sensor is in the electrical compartment.
Drill a 7mm hole in the duct, for the sensor. Enter the sensor into the hole, seal the hole and attach the wire to the duct using tape.

For connection info on return water sensor (B5), valve motor and shutting damper, refer to the wiring diagram.

10

Use the unit's cable bushings for connecting external components.

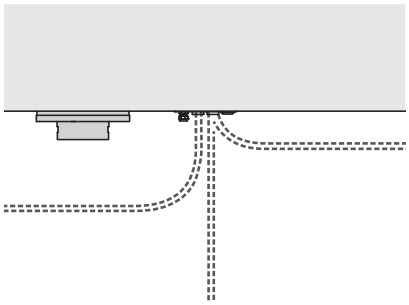

CL-unit

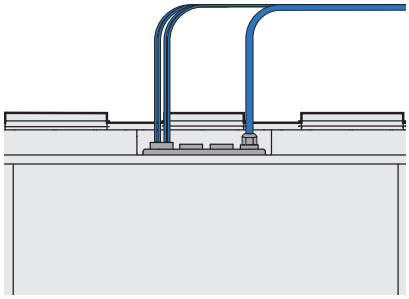

S-unit

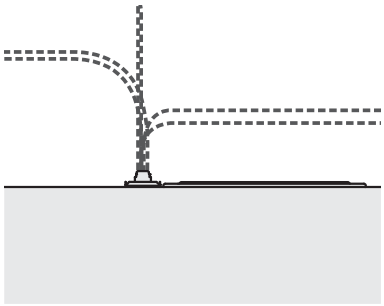

L-unit

7. Return water sensor (B5)

To prevent the heating coil from freezing, a sensor (B5) must be attached to the water pipe for outgoing water.

Fig. 3

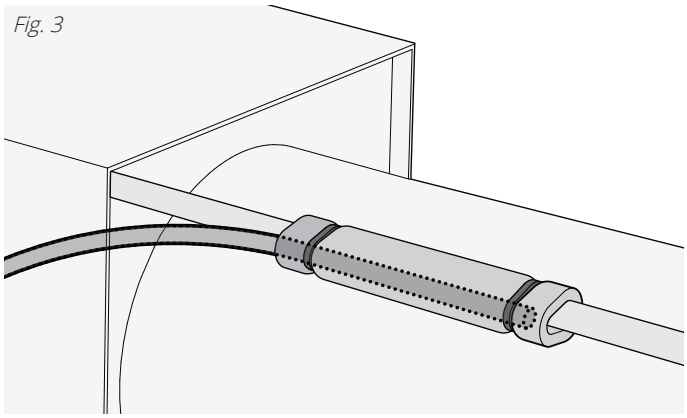

Attach the sensor with isolation and strips (see fig. 3).

8. Wiring diagram

NB! Block numbers are not in order in the examples.

Damper motor 230V, 3 wire

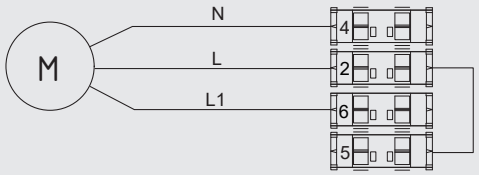

NB! Insert plug-in bridge between 2 and 5

can be 8 or 10 regarding on I/O config

can be 7 or 9 regarding on I/O config

Damper motor 230V, 2 wire

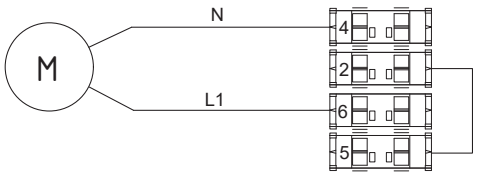

can be 8 or 10 regarding on I/O config

can be 7 or 9 regarding on I/O config

Circulationpump motor 230V

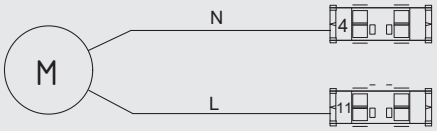

Shunt valve motor 230V

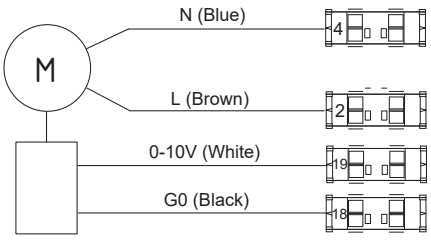

B5 return water sensor water coil

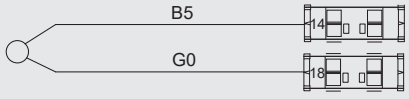

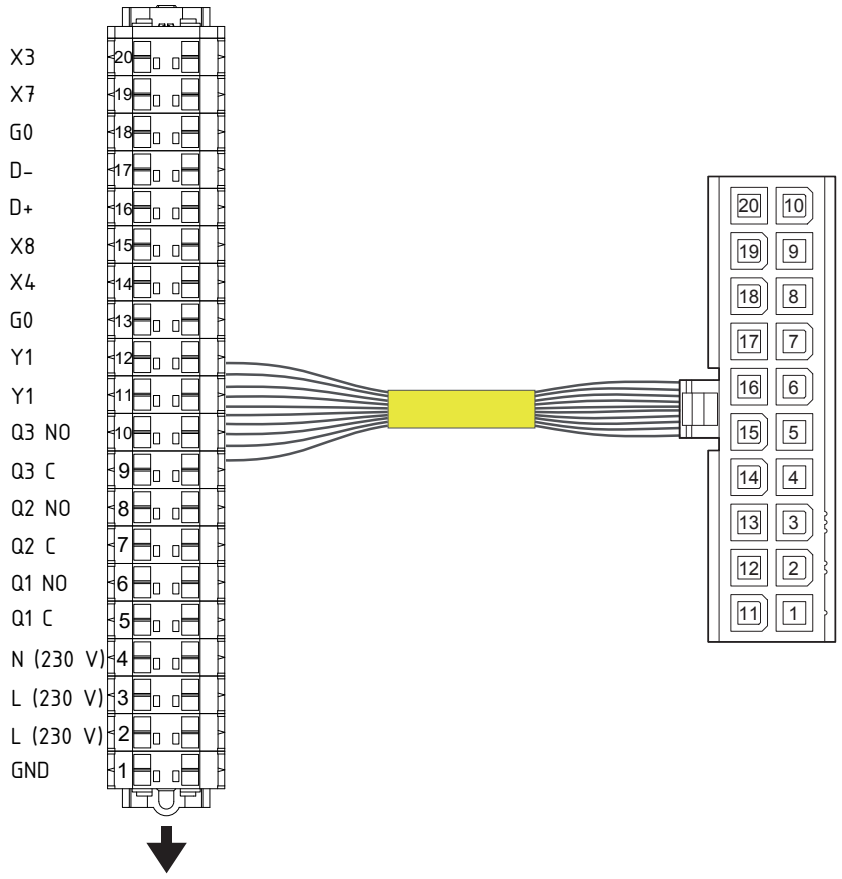

Fits a connector in the electrical compartment of the ventilation unit.

1	GND	PE
2	L (230 V)	L 230 V
3	L (230 V)	L 230 V
4	N (230 V)	N 230V
5	Q1 C**	Supply digital output 1
6	Q1 NO*	**Digital output 1 normally open** **The following choices can be made:** None Outside air damper Fire damper Common alarm and maintenance indication Alarm indication Maintenance indication Operation indication Bypass damper Cooling pump
7	Q2 C**	Supply digital output 2
8	Q2 NO*	**Digital output 2 normally open** **The following choices can be made:** None Outside air damper Fire damper Common alarm and maintenance indication Alarm indication Maintenance indication Operation indication Bypass damper Cooling pump
9	Q3 C**	Supply digital output 3
10	Q3 NO*	**Digital output 3 normally open** **The following choices can be made:** None Outside air damper Fire damper Common alarm and maintenance indication Alarm indication Maintenance indication Operation indication Bypass damper Cooling pump

11	Y1*	**Digital output Y1 (230 V)** **The following choices can be made:** None Electrical heater Pump water heater
12	Y1*	**Digital output Y1 (230 V)** **The following choices can be made:** None Electrical heater Pump water heater
13	G0	Signal ground
14	X4*	**Digital or analog input** **The following choices can be made:** Ingen Thermostat overheating Return water temperature
15	X8*	**Digital input X8** **The following choices can be made:** None Home Away Emergency off CO detector Smoke detector - extract Smoke detctor - supply Smoke detector - off Smoke detector - max Fire damper feedback
16	D+	Modbus slave D+
17	D-	Modbus slave D-
18	G0	Signal ground
19	X7*	**Analog output 0-10 V** **The following choices can be made:** None 0-10V Water heater valve 0-10V Water cooling valve
20	X3*	**Analog input 0-10 V** **The following choices can be made:** None 0-10V Humidity sensor 0-10V CO_2 sensor

* Inputs/outputs whose function depend on the chosen Flexit GO configuration. Underlined choice is default for an air handling unit configurated for water heating.

** Max. voltage 230 V AC max. current 2A resistive load

9. Configuration

Connect your phone/tablet to the same network as your product before you start the Flexit GO app.

Log in:

Find product > Mark your unit > Connect > Type in the password ”1000” > Log in

Set the product in configuration mode:

Menu > More > Installer > Configuration > OK

Choose configuration:

Configure functionality > Heating coil > Water > OK > Done > Apply > OK

10. Maintenance

The lamellas in the heating element must be cleaned on a regular basis. First, clean the entry side of the element with a brush, then the whole element can be cleaned with compressed air, water or steam.

Blow the filth away from the outgoing end to the incoming end.

With the use of detergent, first make sure that it does not react with copper or aluminium.

Take care not to harm the thin lamellas during cleaning.

11. Accessories





Shunt valve:

- For continuous regulation of varm or cold water in open or closed circuits.
- Flow control of heater and coolers in climate installation.
- Bubble proof closing in closed mode.
- Cold or warm water that can be mixed with up to 50% vol. antifreeze.

3-way

3-port regulation valve with linear characteristics.

Inside thread connection Rp 1/2", DN 15
Nickelcoated housing, heat-pressed brass
Valve housing, stainless steel
Sealer PTFE/EPDM O-ring
ps 1600kPa

2-way

2-port regulation valve with effektilinjar (equal percent) characteristics.

Inside thread connection Rp 1/2", DN 15
Nickelcoated housing, heat-pressed brass
Valve housing, stainless steel
Sealer PTFE/EPDM O-ring
ps 1600kPa



Air damper with spring loaded closing Ø125

- LF230, Belimo
- AC 230V,
- 50/60Hz,
- 4Nm,
- 7VA,
- 5W
- With short cable 2x0,75mm^2.

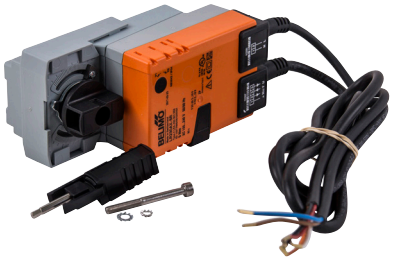

Shunt valve motor:

AC 100-240V 50/60Hz
Power consumption in operation 1,5W with rated torque in standby mode 0,4W, for dimensioning 4VA.
Connection cable 1m 3x0,75mm^2
Torque Min5Nm at voltage
Soundlevel Max 5dB(A) without valve
Position indicator mechanical
Protection class 2
Protection class IP54

	Overview
14482	Air damper with spring loaded closing Ø160
14481	Air damper with spring loaded closing Ø200
56596	Shunt valve motor
	Shunt valves
110939	2-way valve DN15 Kvs. 0,25
110940	2-way valve DN15 Kvs. 0,4
110941	3-way valve DN15 Kvs. 0,25
110942	3-way valve DN15 Kvs. 0,4

111812	2-way valve DN15 Kvs. 0,63
111813	3-way valve DN15 Kvs. 0,63
111814	2-way valve DN15 Kvs. 1,0
111815	3-way valve DN15 Kvs. 1,0

12. Frost safety function in the ventilation system control system

To always minimize the risk of freezing of the water heating coil, 2-stage frost protection and additional idle time frost protection functions are available.

Frost protection function while unit is in operation:

Application uses 2-stage frost protection with 2 dedicated setpoints which firstly aims to prevent the freezing while allowing the ventilation still be normally active and secondly protecting the unit if prevention was insufficient. For this function B5 temperature sensor is mandatory and it must be located in the coldest place of the water heating coil.

Stage 1 - Frost risk:
When B5 temperature drops below settable frost risk setpoint (default 10°C), pump (output Y1) is switched on (if not already on) and valve (output X7) is controlled according to B5 (input X4) temperature to frost risk. When B5 temperature reaches frost risk SP-frost protection function is ended successfully.

Stage 2 – Frost protection:
When temperature at B5 (input X4) drops below settable frost protection setpoint (default 5°C), pump (output Y1) is switched on (if not on already), valve (output X7) is opened 100%, ventilation is shut down, possible outside air dampers are closed and A-alarm is activated.
New start can only be made after manual acknowledgement and reset.

Protection function while unit is not in operation:

During the times when ventilation unit is switched off for some reason (power supply must exist), B5 (input X4) temperature has an additional setpoint (default +25°C) to secure start-up situation. When heating coil is constantly kept warm, it will not drop to frost protection limit during start-up even when the outside conditions are cold.
Pump (output Y1) runs constantly during ventilation unit off-periods. If the B5 (input X4) temperature drops during unit off times below set temperature limit, valve (output X7) is PI-controlled to reach idle setpoint. Alarm is not activated unless the temperature at B5 drops below frost protection setpoint.

Flexit AS, Moseveien 8, N-1870 Ørje
www.flexit.com