115545EN-05
2022-12



EUROVENT CERTIFIED PERFORMANCE
RAHU 19.12.007
www.eurovent-certification.com

Nordic S4

Flexit GO

ART.NO. 800130, 800131, 800132, 800133

EN

INSTALLATION INSTRUCTIONS

Air handling unit

INSTALLATION INSTRUCTIONS

Contents

1. Planning and preparation work....6
   - 1.1. Joiner/Fitter....6
   - 1.2. Plumber....6
   - 1.3. Electrician....6
2. Installation....7
   - 2.1. Positioning requirements....8
   - 2.2. Space requirements....9
   - 2.3. What is supplied?....10
   - 2.4. Installation....11
3. Duct connection....13
   - 3.1. Connection to the unit....13
4. Electrical work....14
   - 4.1. For use with a water battery....14
5. Plumbing work....14
6. Cover....15
   - 6.1. Preparations....15
   - 6.2. Flexit duct cover....15
7. Installing and adjusting the kitchen fan....16
   - 7.1. Installation....16
     - 7.1.1. Kitchen fan without motor....16
     - 7.1.2. Kitchen fan with motor....16
   - 7.2. Adjusting....16
     - 7.2.1. Kitchen fan without motor....16
     - 7.2.2. Kitchen fan with motor....16
8. System and general drawings....17
   - 8.1. System drawing (electric heating battery)....17
   - 8.2. System drawing (without heater)....17
   - 8.3. General drawing....18
   - 8.4. Nipple location....20
9. Technical data S4....21
10. Dimensioned drawing S4....22
11. Capacity and sound data S4....23
    - 11.1. Supply air side L....23
    - 11.2. Extract air side L....23
    - 11.3. Correction factor for Lw (left)....24
    - 11.4. Supply air side R....25
    - 11.5. Extract air side R....25
    - 11.6. Correction factor for Lw (right)....26
12. Final checks/Starting....27
    - 12.1. Final checks....27
    - 12.2. Startup....28
13. Complaints....29
14. Waste handling....29

Symbols used

These products bear a number of symbols used for labelling the actual product and in installation and user documentation.


Supply air


Extract air


Extract air from kitchen


Exhaust air


Outdoor air


DANGER: ELECTRICITY


DANGER! DO NOT TOUCH

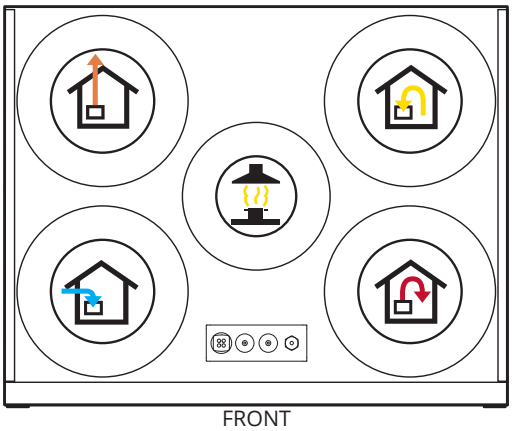

EXAMPLE OF NIPPLE LOCATIONS (shown as left model)

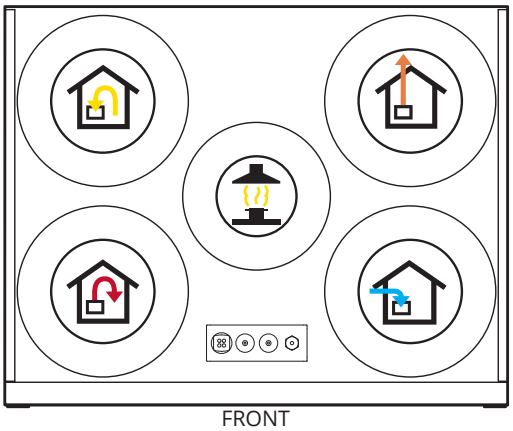

EXAMPLE OF NIPPLE LOCATIONS (shown as a right model)

DANGER! When a text box is this colour, it means that a life-threatening or serious personal injury may be the consequence of not following the instructions.

NOTICE! When a text box is this colour, it means that a poor utilisation ratio or product operating issues may be the consequence of not following the instructions.

CAUTION! When a text box is this colour, it means that material damage may be the consequence of not following the instructions.

INFO! When a text box is this colour, it means that it contains important information.

SAFETY INSTRUCTIONS

- To avoid the risk of fire, electric shock or injury, read all the safety instructions and warning texts before using the unit.
- All electrical connections must be carried out by qualified electricians.
  If the power lead is damaged, it must be replaced by the manufacturer, the manufacturer's service agent or a similarly qualified person.
- The unit must not be used to extract combustible or flammable gases.
- It is the installer's responsibility to carry out a full safety and function assessment of the appliance.
- Before opening the door: switch off the heat, let the fans continue for 3 minutes to remove hot air, unplug the unit and wait 2 minutes before opening the doors, as the unit contains elements that must not be touched when hot.
- This appliance may be used by children of 8 years or above or by persons with reduced sensory capacity or reduced physical or mental capacity, or by persons lacking experience or knowledge, provided they have received instruction in the safe use of the appliance or are supervised to ensure safe use and providing they are aware of the risks.
- The product is not suitable for use by children. Children must not be allowed to play with the appliance. Children must not carry out cleaning or maintenance without supervision.

- This unit is only designed for ventilation air in homes and commercial buildings.
- To maintain a good indoor climate, comply with regulations and avoid condensation damage, the unit must never be stopped apart from during service/ maintenance or in connection with an accident.
- The unit must not be operated without the filters being in place.
- All plumbing work must be carried out by an authorised plumber.
- The location of the water battery must be approved by a plumber owing to the risk of water leaks.

- Tumble dryers must not be connected to the unit.
- The room must have a separate, adequate air supply when products such as gas cookers, gas heaters, fireplaces, wood-burning stoves, oil-fired boilers, etc., are used.

1. Planning and preparation work

1.1. JOINER/FITTER

Airflow
Check that the air moves from rooms with supply air valves to rooms with extract air valves.

Kitchen
If the kitchen fan is designed with a motor, sufficient supply air must be ensured. See chap.7.1. Installation on page 16 and chap.7.2. Adjusting on page 16 for more information.

Fireplace
When using the fireplace suitable supply air must be ensured.

Location in the building
Location of the unit on an internal wall requires insulation of the wall, interrupted studs and boards, and double plasterboard or a wall structure of similar quality (see chap.2.1. Positioning requirements on page 8).



Positioning must comply with individual countries' electrical safety legislation. Check which rules apply in your country.

Suspension of unit
For screws, suitable noggings (min. 48 x 98 mm) are required between studs.
See chap.2. Installation on page 7.

Access
The unit must have good access for service/ maintenance. See chap.2.2. Space requirements on page 9 for details.

Fire requirements
Any fire safety requirements must be clarified.

The positioning of heat sources must be coordinated with extract air valves so that heat is not sucked straight out through a valve or door gap.

1.2. PLUMBER

(if the unit has a water battery)

Water pipe layout and placement of the water battery (channel battery) must be planned. These must be kept warm to avoid frost damage. A closing damper with spring must be used. See separate instructions (116166) that accompany the water battery.



The water battery must be located in a room with a drain.

1.3. ELECTRICIAN

Power supply
The units have an approx. 2 m cable with plug and require a single-phase earthed socket nearby. Plug requirements: 10 A. We recommend a separate circuit for the unit. For permanent installation, it is possible to use a fuse in the installation network, provided that it is approved and it must be possible to secure it in the off position. Or a separate approved service switch can be installed.



It is important for the plug to be accessible for servicing when the unit is fully installed.



The unit should be installed with an earth fault breaker.

When using the app:
The unit must be connected to the internet or an access point for local communication with the app. A conduit of at least Ø20 mm is recommended between the unit and the home's router for the network cable.

When using the control panel:
Lay a Ø20 mm conduit for running the cable for controlling the unit between the unit and an easily accessible place in the home (e.g. outside the bathroom) and terminate with a flush-mounted single wall box. Locate the control panel here. The control cable must be located min. 30 cm away from any power cables. The control cable must be max. 24 m long to ensure a signal.

For use with accessories:
Lay a Ø16 mm conduit between the unit and the location of the accessory in question (kitchen fan, pressure relay, etc.).

NB! The PG nipple for the power cable must be tightened with a torque of 2.0 Nm if the cable is replaced.

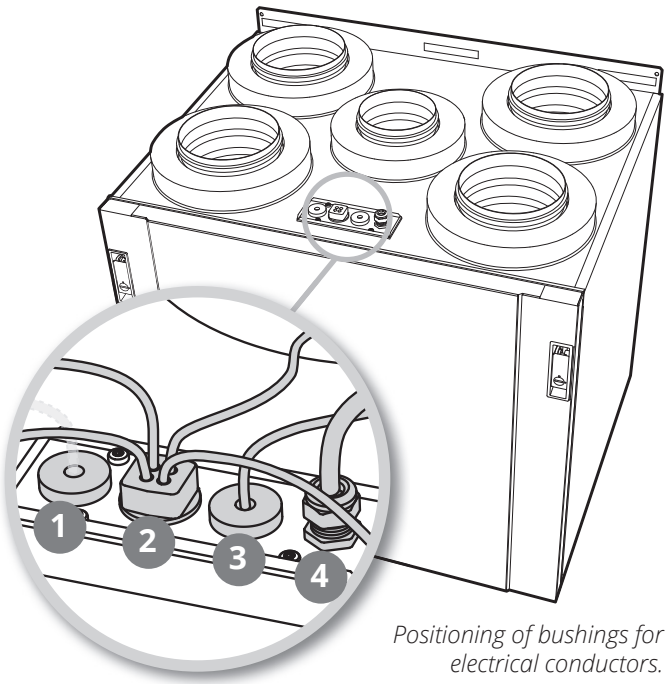

Positioning of bushings for electrical conductors.

The installation instructions for the individual products must be followed.

For more information on automatic control see www.flexit.com or the manual for Flexit GO and the control panel (120018).

	Cable type	
1	Not in use (accessory)	
2	Network cable	
	Cable for control panel	(CI-70)
	3-core cable (for e.g. kitchen fan)	(DI1&DI2)
	Accessory cable	(Accessories)
3	Cable for control panel	(NordicPanel)
4	Power cable, unit	

For exact positioning of the electrical bushings, see chap.10. Dimensioned drawing S4 on page 22.

2. Installation

Nordic S units can be installed vertically on the floor/ wall or suspended from the ceiling and can be in hot and cold zones:

- On the wall (vertically).
  (Mounting supplied with unit.)
- On the floor (vertically).
  Absorption feet must be fitted (available as an accessory).
- On the ceiling (vertically).
  A ceiling mounting must be fitted (available as an accessory).

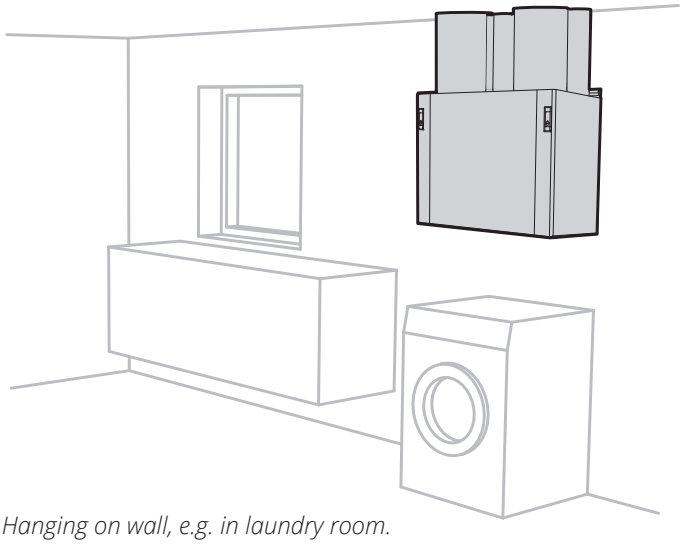

Hanging on wall, e.g. in laundry room.

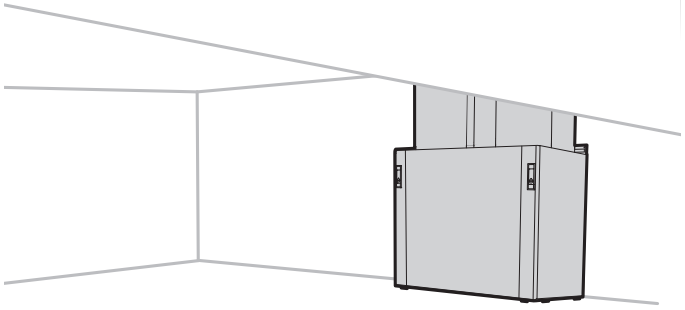

Standing on absorption feet on floor, e.g. in loft.

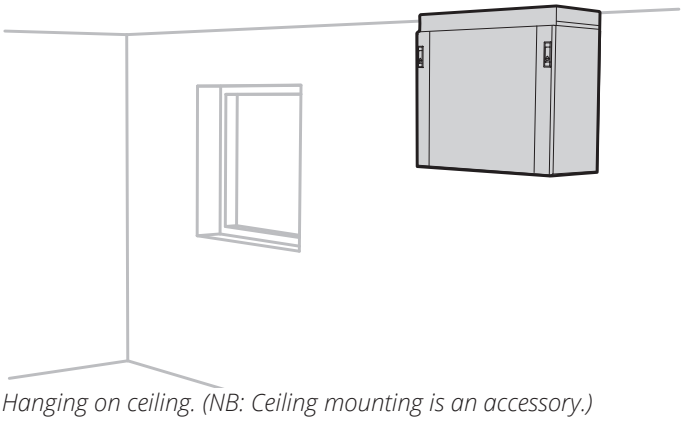

Hanging on ceiling. (NB: Ceiling mounting is an accessory.)

2.1. POSITIONING REQUIREMENTS

The unit is designed to be installed in boiler rooms, laundry rooms, stores or other suitable areas. The unit can be in a cold location.

Positioning must comply with individual countries' electrical safety legislation. Check which rules apply in your country.

The unit should be positioned in such a way that there is no danger of noise nuisance in nearby rooms.

- If the unit is located in a warm room where a lot of moisture is generated, condensation may form on the outside of the unit during periods when the outside temperature is low.

The base should be stable and level.

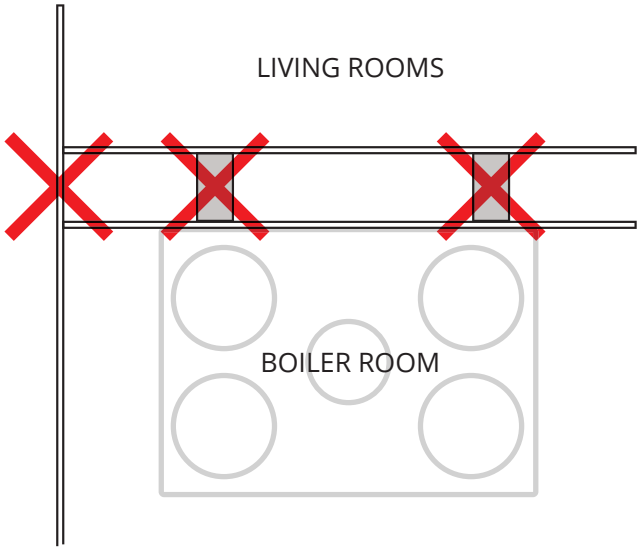

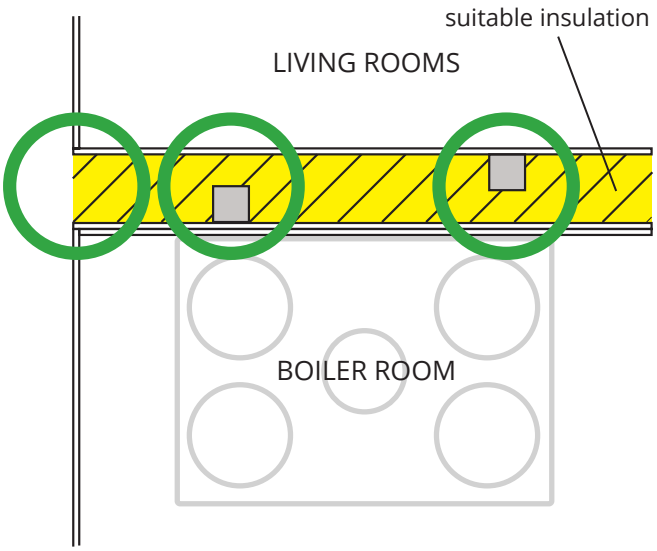

2.2. SPACE REQUIREMENTS

The unit must be installed with suitable space for servicing and maintenance such as filter replacement and cleaning of fans and recovery system. See Fig. 1.

These are minimum requirements and only take service needs into account.

All electrical conductors from the unit must be easily accessible when the unit is fully installed.

Positioning must comply with individual countries' electrical safety legislation. Check which rules apply in your country.

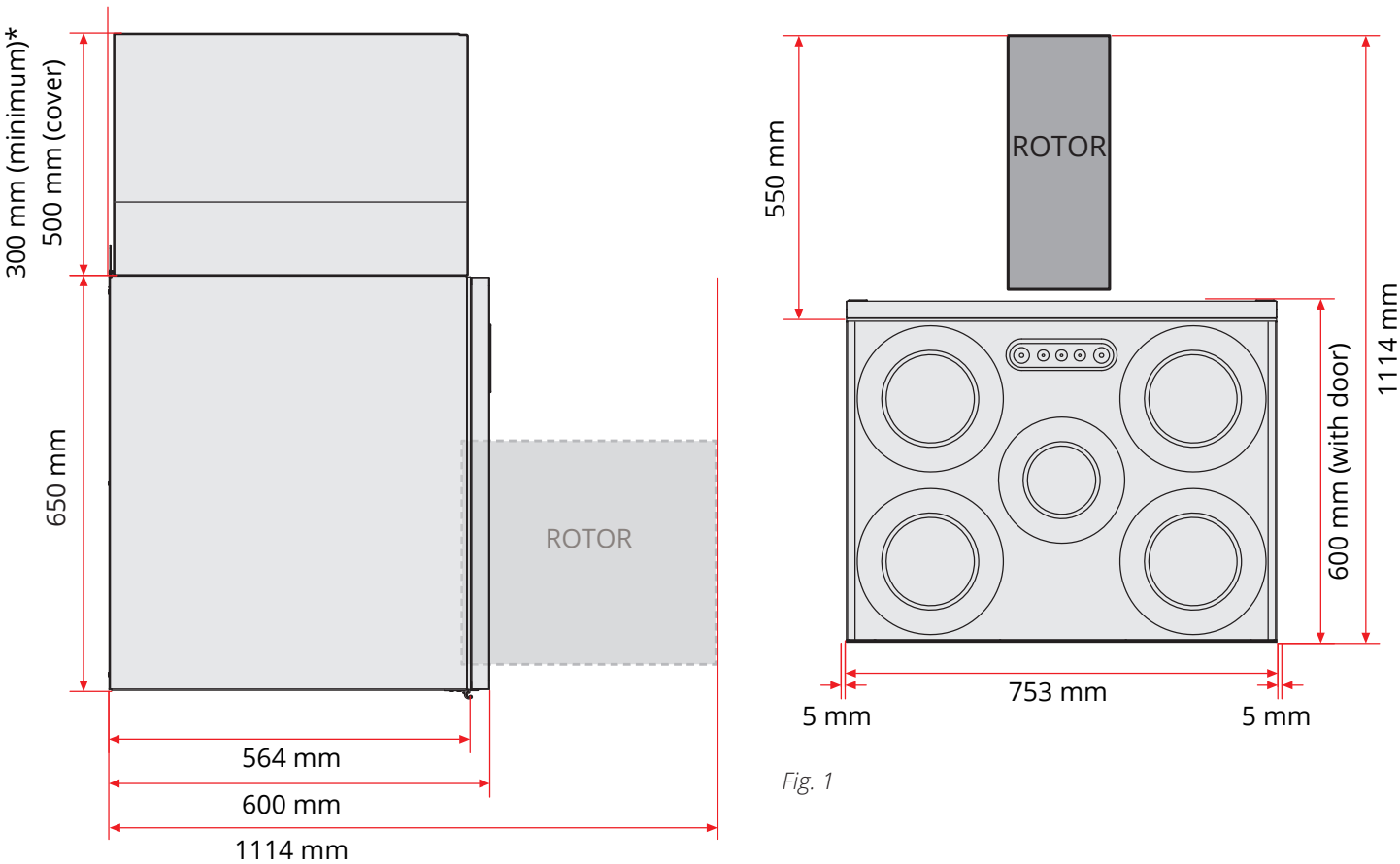

Fig. 1

*For use with a duct cover (accessory)

2.3. WHAT IS SUPPLIED?

1x

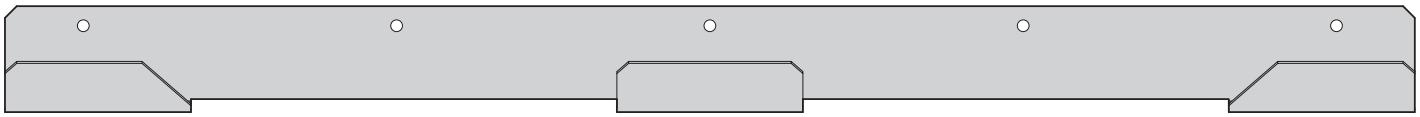

5x



5x

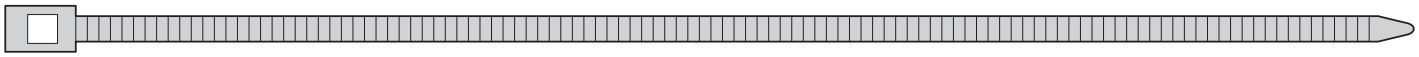

2.4. INSTALLATION

The unit is available in left and right versions (outdoor air nipple to the left or right), depending on what is the most favourable in relation to the duct location.

In the case of wall mounting, secure the wall bracket to the wall and hang the unit in place (Fig. 3). Hold the unit at an angle when hooking it onto the wall.

The top edge of the wall bracket should be mounted 17 mm higher than the top of the unit's back panel. If, for example, the top of the unit is to be 400 mm below the ceiling, the wall bracket should be mounted 383 mm from the ceiling, measured from the ceiling to the top edge of the wall bracket (Fig. 2).

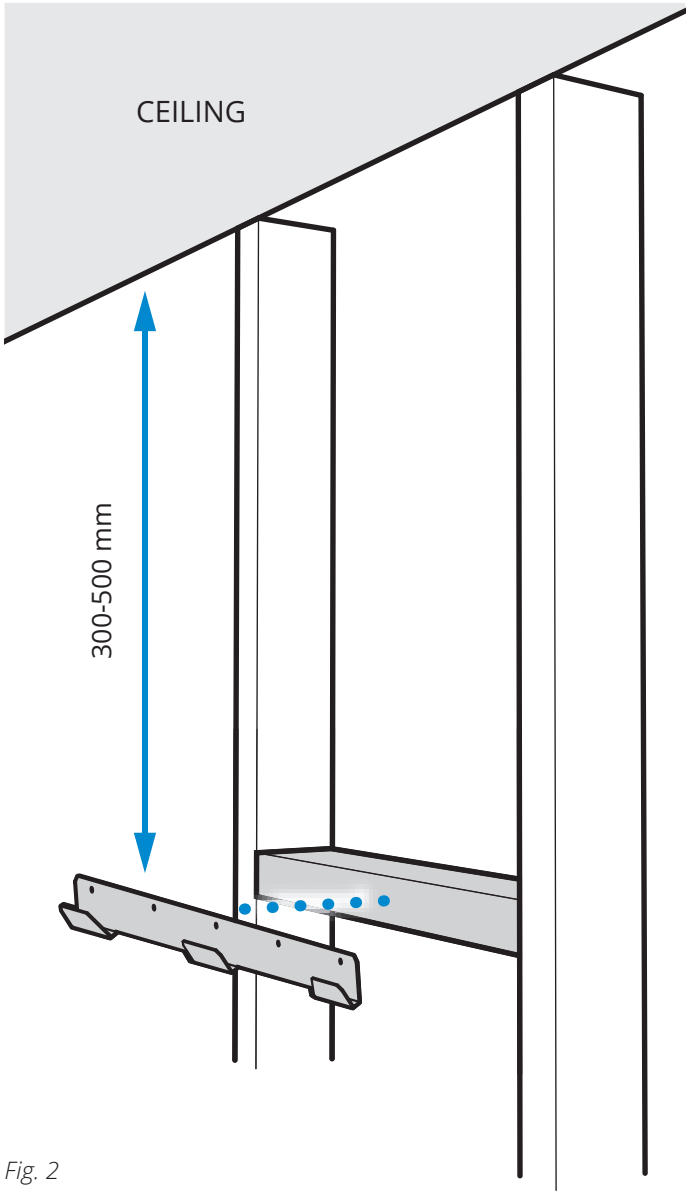

Fig. 2

Alternative mounting methods:

1. Vertical mounting on wall

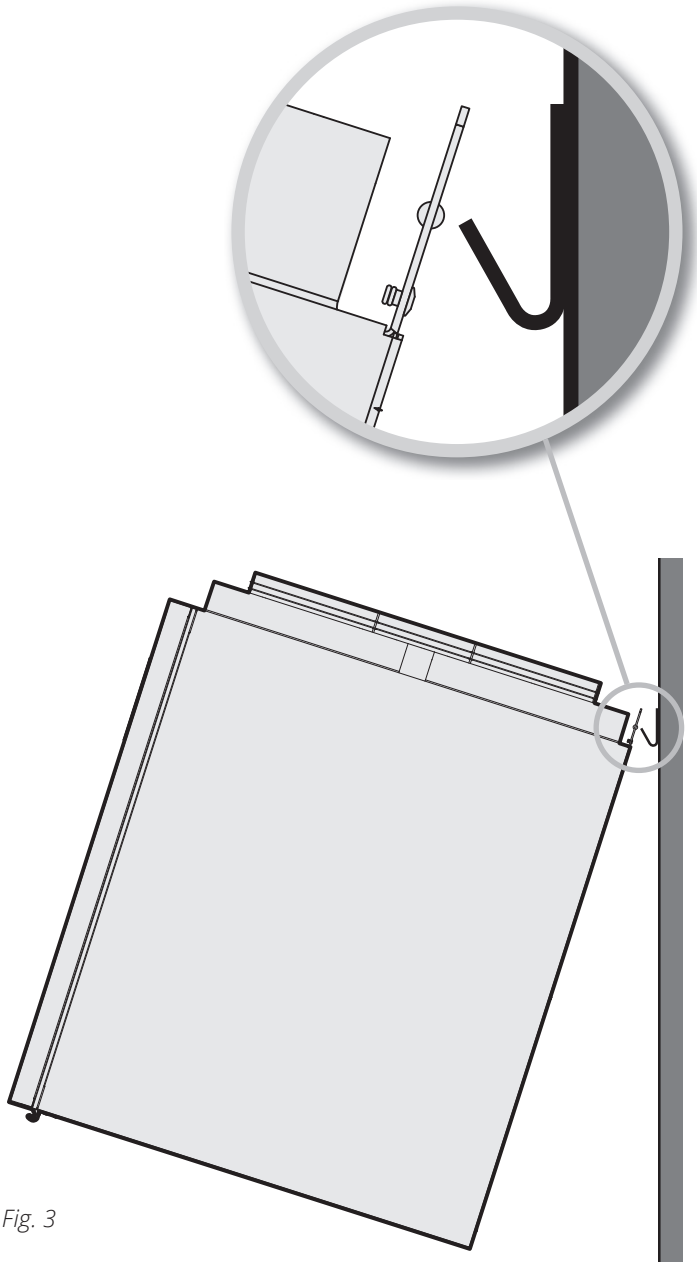

Fig. 3

Alternative mounting methods:

1. Standing on floor

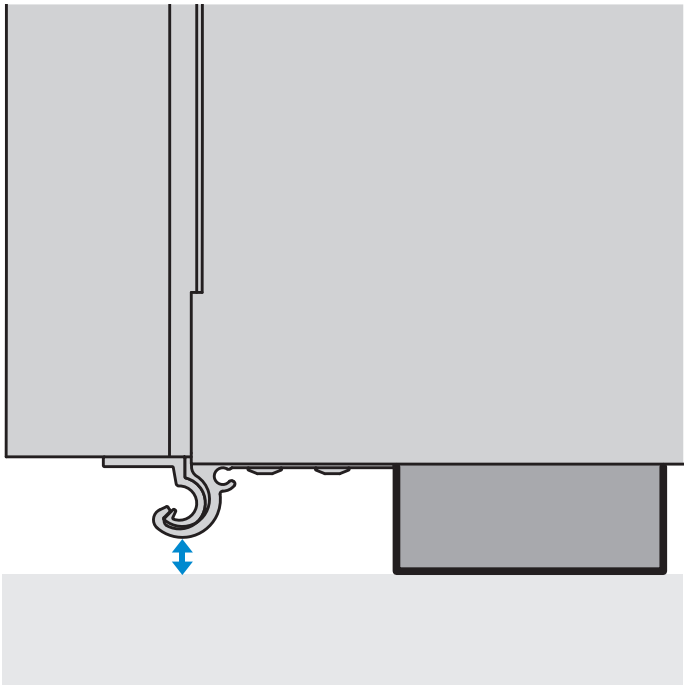

Absorption feet (accessory) must be fitted when the unit is to stand on the floor. This raises the unit and enables the door rail to clear the floor.

3. Duct connection

3.1. CONNECTION TO THE UNIT

See Fig. 4.
Ensure that the ducts are fitted to the correct nipple – see the markings on top of the unit and chap.8. System and general drawings on page 17

Pull the duct insulation well up to the unit.
To avoid the formation of condensation, it is particularly important for the outdoor and exhaust air ducts to have insulation and a plastic sleeve pulled right down to the unit.

Seal the plastic sleeve to the unit with ties.

All ducts that pass through a cold zone must be insulated. The ducts normally require min. 50 mm insulation, with an efficiency corresponding to λ = 0.035 W/m.°C or better. The fitter is responsible for use of the required insulation and vapour-proof sleeves in accordance with location/ temperature.

Lay the outdoor air duct with a slight incline towards the outdoor air cap so that any water that enters drains out again.

Ducts should have good sound insulation, particularly above the unit.

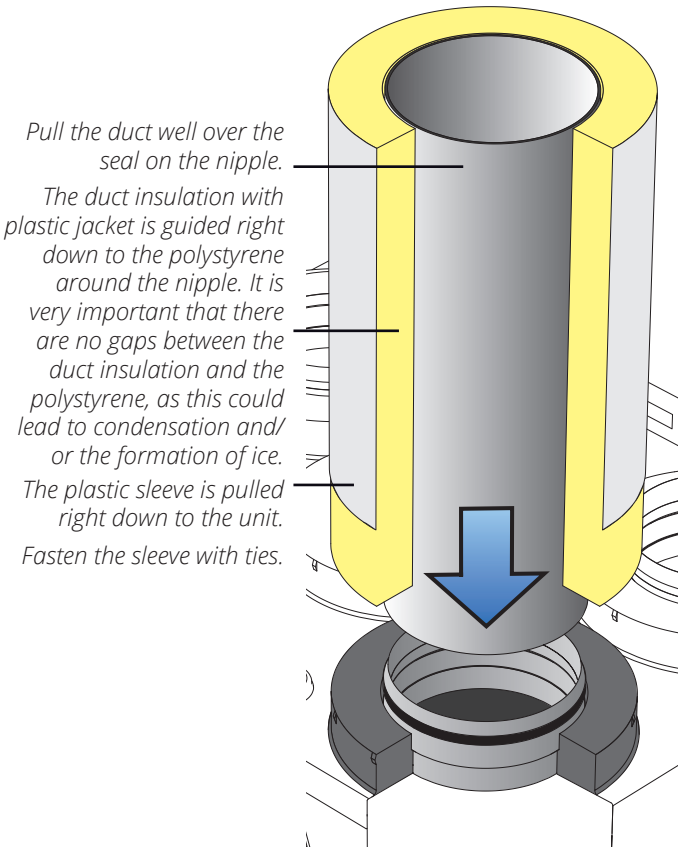

Fig. 4 *Duct connection*



Fitted duct

4. Electrical work



The unit should be installed with an earth fault breaker. All electrical connections must be carried out by a qualified electrician.

The unit is supplied with a 2 m cable with plug.
The cable exits at the top of the unit and is connected to a 230 V 50 Hz single-phase earthed power point that is placed in an easily accessible position close by.
The power plug should be used as the service switch.
See chap.9. Technical data S4 on page 21 for fuse sizes.



Positioning must comply with individual countries' electrical safety legislation. Check which rules apply in your country.



Ensure that the plug for the unit is not boxed in.

Internet access:

For functions such as controlling the unit outside the home and having access to updates and other cloud services, the unit must be connected to the internet.
Lay a network cable between the unit and the home's router, and connect.

Accessories:

Wireless accessories

A wireless adaptor can be connected to the 4-pole contact marked "Accessories". For configuration with the Flexit GO app, see the instructions that come with the accessories.

Other accessories

Accessories with a closing contact can be connected to a 3-core cable on top of the unit.

Label	Colour	Function	Description
DI1	Brown	HIGH (default)	Forced airflow
DI2	Green	COOKER (default)	Forced air supply
+24V (REF)	White	Reference	

The inputs can be configured for other functions with the Flexit GO app, see instructions in manual (117078).

Control panel:

A control panel can be connected to the 4-pole contact marked NordicPanel.
For more information, see the instructions for the control panel (120018).



Signal cables must be at least 30 cm from power cables and should be laid in a 20 mm wiring conduit at installation. The cables must not be more than 24 m long.

4.1. FOR USE WITH A WATER BATTERY

For more information, see instructions (116166) for water battery.

5. Plumbing work*

*If the unit is going to have heating with a water battery.

All plumbing work must be performed by an authorised plumber. See instructions (116166) for water battery.

6. Cover

For service reasons the cover must have a hatch or removable front.

To prevent the transmission of noise and vibrations, the cover and the unit should not be in direct contact with each other.

6.1. PREPARATIONS

The placement of the cover is naturally affected by the placement of the unit. Therefore plan the positioning of both the unit and the cover prior to installation.

The radiated noise from the unit specified in the sound data does not include possible noise from ducting. The cover should therefore be soundproofed too.

6.2. FLEXIT DUCT COVER

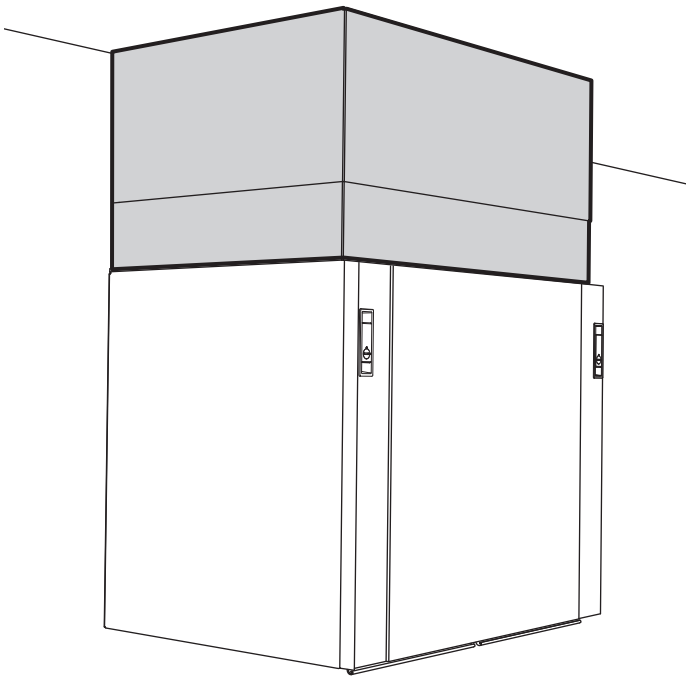

Flexit duct covers are available as accessories.

7. Installing and adjusting the kitchen fan

7.1. INSTALLATION

If an external kitchen fan is going to be used, documentation regarding installation and adjustment of air flow rates is supplied with the fans.

7.1.1. Kitchen fan without motor

(connected to unit with duct connection)

The air handling unit has a separate connection point for kitchen fans without a motor. An electric cable (low-voltage) must be connected between the unit and the fan in order to force the air flow in the hood via the switch on the hood.

7.1.2. Kitchen fan with motor

(not connected to unit)

The kitchen fan with motor is not connected to the unit. It has a completely separate duct system for air evacuation.

With the kitchen fan it is possible to compensate for the amount of air drawn out of the house. See chap.7.2. Adjusting for more information.

7.2. ADJUSTING

If the kitchen fan is not supplied by Flexit, the fan supplier must plan air flow rates for extract air in the hood, and arrange for supply air to the hood.

7.2.1. Kitchen fan without motor

(connected to unit)

To reduce the risk of forced ventilation through the cooker hood causing imbalance between extract air and supply air, the flow should also be adjusted on the "Cooker hood" setting on the fans. The flow between the attachment and the cooker hood can be measured with an air-flow meter.

The method for adjusting the fan force will vary, depending on which control unit is used (NordicPanel or the Flexit GO app). In this description the Flexit GO app is used.

Procedure:

1. Choose the cooker hood setting with the damper open and the "cooker hood" signal activated. Adjust the extract force in the "cooker hood" position until the flow over the cooker hood is 150-180m^3/h, to obtain odour capture of approx. 75%.
2. Then measure the flow from all air extractors and add this flow to the flow over the cooker hood.
3. Measure and add up the flows on all supply air units. Adjust the fan force in the "cooker hood" setting for the supply air fan to the point where the flow is the same for both fans.

7.2.2. Kitchen fan with motor

(not connected to unit)

If a kitchen fan with a motor is used, the volume of air extracted from the building increases. The air handling unit can be adjusted to provide more supply air than extract air to compensate for this.

A signal to the unit is required when the kitchen fan is used:
Connect an external switch with potential-free ON/OFF signal to the 3-core cable on the unit (DI2, see wiring diagram).
Install the pressure relay (accessory).

The cooker hood function works as follows:
The supply air fan will speed up, while the extract air fan will continue at a low level to partly compensate for the air flow that the cooker hood extracts from the house.

Check the kitchen fan's maximum capacity (based on the capacity diagram on the kitchen fan).
Ensure that the kitchen fan receives sufficient air via one or more fresh air valves, for example.

8. System and general drawings

8.1. SYSTEM DRAWING (ELECTRIC HEATING BATTERY)

(shown as a right model)

Abbreviation	Description
B1	Supply air temperature sensor
B3	Extract air temperature sensor
B4	Outdoor air temperature sensor
B6	Exhaust air temperature sensor
EB	Heating battery
F10	Overheating thermostat, manual reset
F20	Overheating thermostat, automatic reset
FI1	Supply air filter
FI2	Extract air filter
M1	Supply air fan
M2	Extract air fan
HR-R	Rotary wheel-type heat exchanger
M4	Rotor motor
DA1	Damper
DA2	Damper

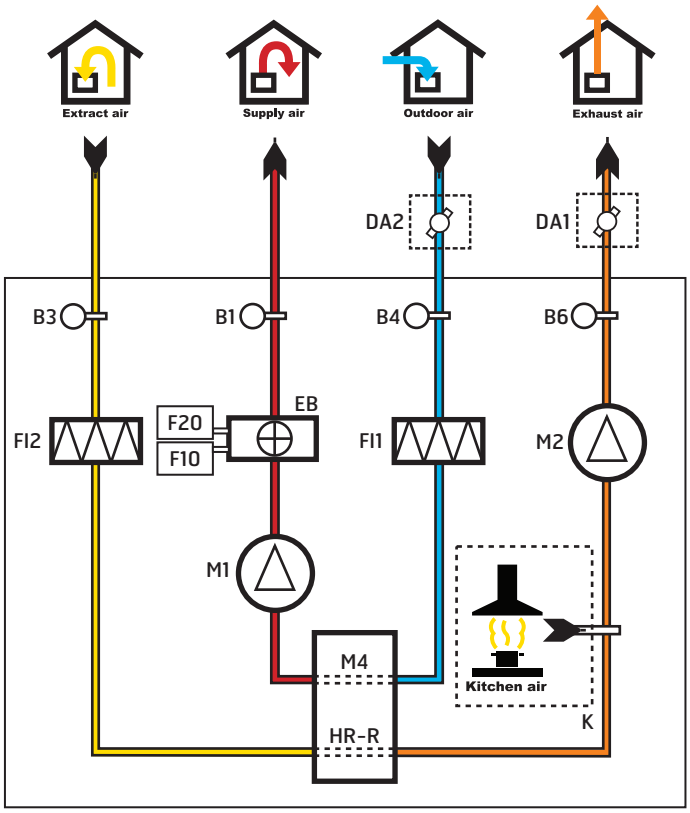

8.2. SYSTEM DRAWING (WITHOUT HEATER)

(shown as a right model)

Abbreviation	Description
B1	Supply air temperature sensor
B3	Extract air temperature sensor
B4	Outdoor air temperature sensor
B6	Exhaust air temperature sensor
FI1	Supply air filter
FI2	Extract air filter
M1	Supply air fan
M2	Extract air fan
HR-R	Rotary wheel-type heat exchanger
M4	Rotor motor
DA1	Damper
DA2	Damper

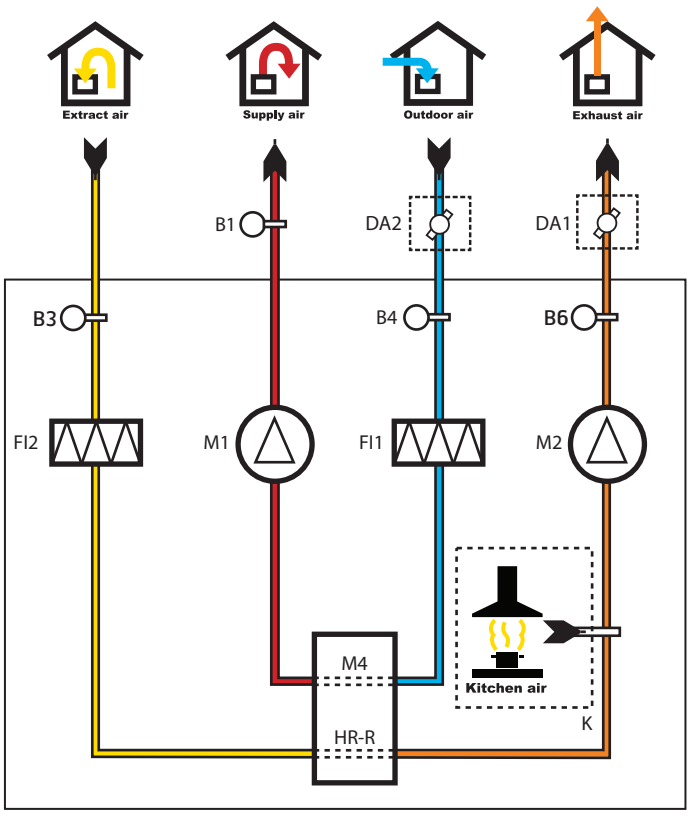

8.3. GENERAL DRAWING

No.	Abbreviation	Description
1	FI1	Supply air filter
2	FI2	Extract air filter
3	M1	Supply air fan
4	M2	Extract air fan
5	HR-R	Rotary wheel-type heat exchanger
6	M4	Rotor motor
7		Control unit
8	K	Kitchen hood connection
9	B1	Supply air temperature sensor
10	B3	Extract air temperature sensor
11	B4	Outdoor air temperature sensor
12	B6	Exhaust air temperature sensor
13	EB1	Heating battery
14	F10	Heating overheating thermostat man.
15	F20	Heating overheating thermostat auto

With electric heating battery

(shown as a right model)

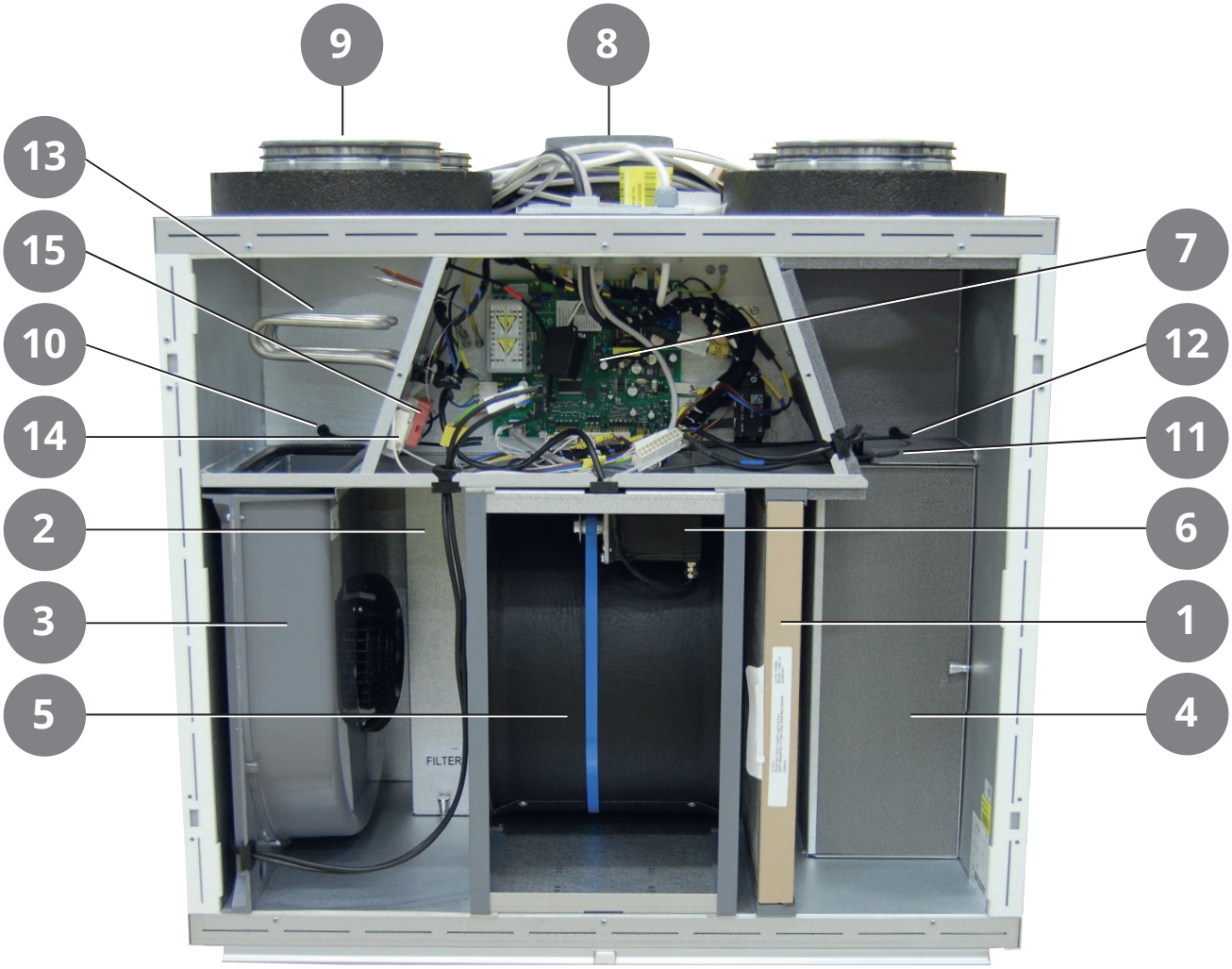

No.	Abbreviation	Description
1	FI1	Supply air filter
2	FI2	Extract air filter
3	M1	Supply air fan
4	M2	Extract air fan
5	HR-R	Rotary wheel-type heat exchanger
6	M4	Rotor motor
7		Control unit
8	K	Kitchen hood connection
9	B1	Supply air temperature sensor
10	B3	Extract air temperature sensor
11	B4	Outdoor air temperature sensor
12	B6	Exhaust air temperature sensor

Without heating

(shown as a right model)

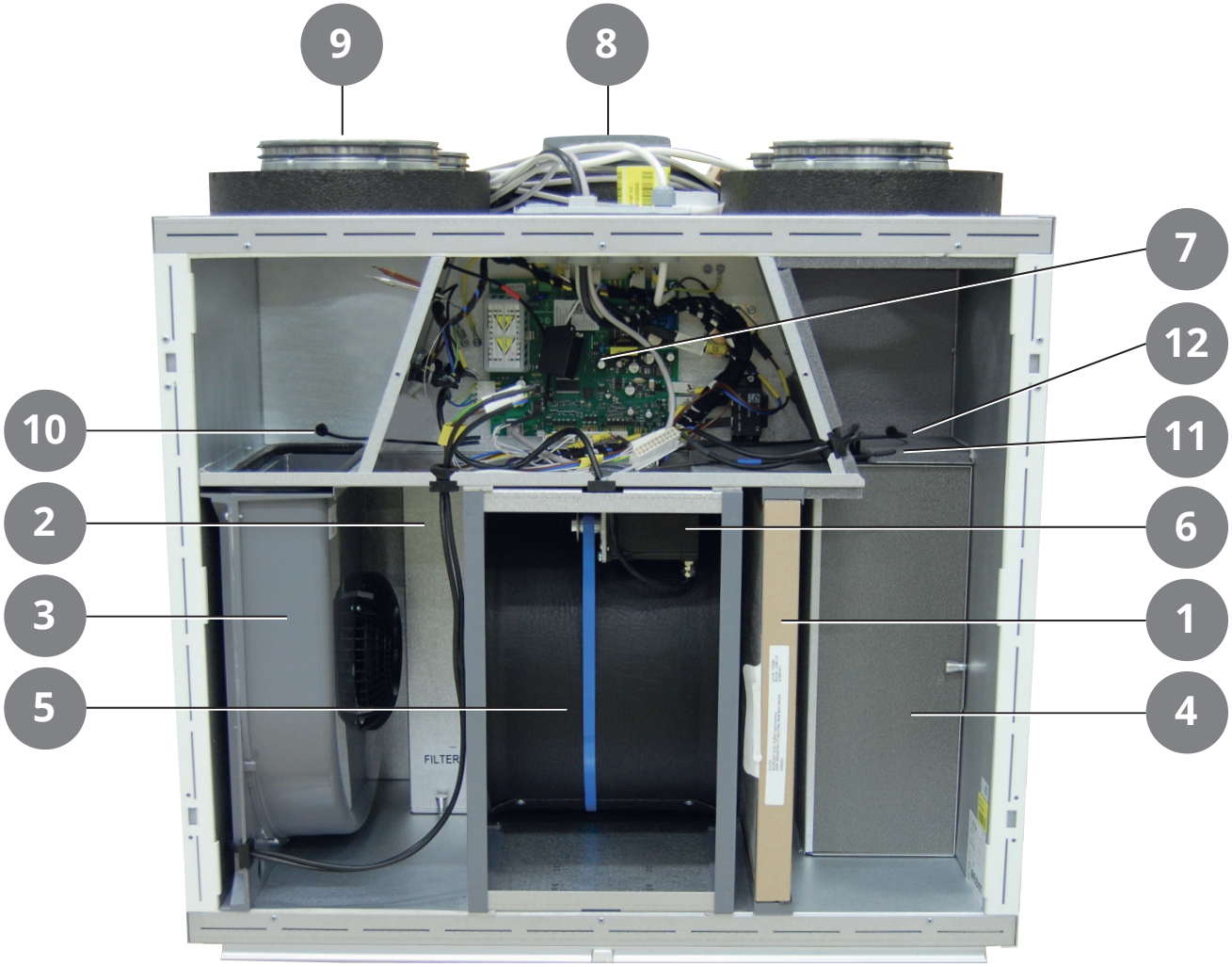

8.4. NIPPLE LOCATION

Right model top

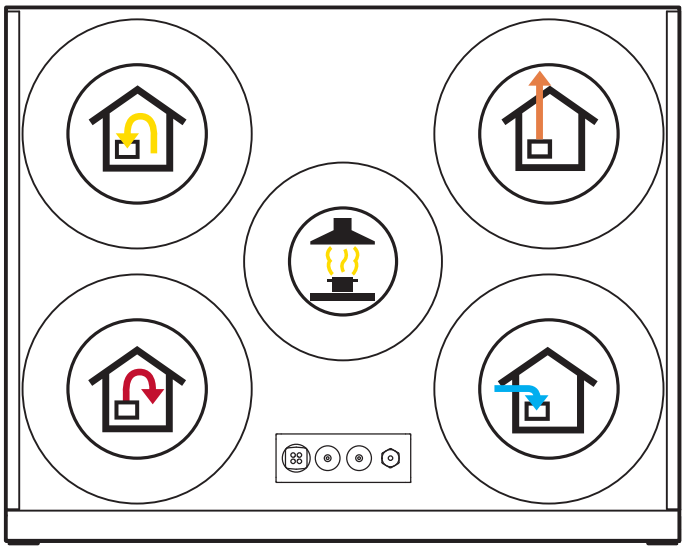

FRONT

Left model top

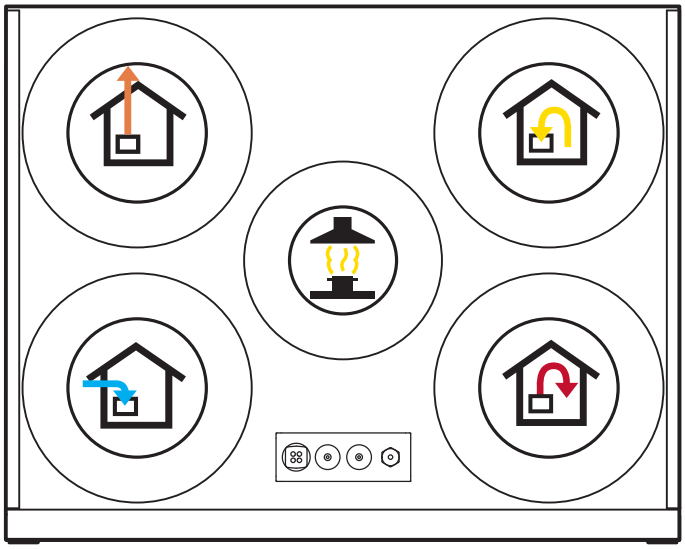

FRONT

9. Technical data S4

		S4 RE	S4 R
		with electric battery	without heating
POWER	Rated voltage (AC 50 Hz)	230 V	230 V
	Frequency	50 Hz	50 Hz
	Fuse size	10 A	10 A
	Rated current	7 A	3.5 A
	Rated power, total	1200 W	400 W
	Rated power, max. electric battery	800 W	-
	Rated power, fans	2x115 W	2x115 W
	Rated power, rotor motor	4 W	4 W
	IP class*	21	21
VENTILATION	Fan type	B-wheel	B-wheel
	Fan motor control	0-10 V	0-10 V
	Max. fan speed RPM	3,980	3,980
	Automatic control, standard	Flexit GO	Flexit GO
	Filter class	ePM1 55% (F7)	ePM1 55% (F7)
	Filter type (supply air/extract air)	Compact filter	Compact filter
DIMENSIONS	Filter dimensions (WxHxD)	247 x 365 x 31 mm	247 x 365 x 31 mm
	Weight, ventilation unit	62 kg	62 kg
	Weight, rotor	10,7 kg	10,7 kg
	Weight, door	6,5 kg	6,5 kg
	Weight, fan	2,8 kg	2,8 kg
	Kitchen fan connection	Dia. 125 mm	Dia. 125 mm
	Duct connection	Dia. 160 mm	Dia. 160 mm
	Height	727 mm	727 mm
	Width	753 mm	753 mm
	Depth	610 mm	610 mm
COATING	Colour	White	White
	RAL	9016	9016
	Gloss	25-35	25-35

*For installation on a wall (ducts up)

Energy class: A

CTRL 0.65

LOCAL DEMAND CONTROL

Sensor control for different zones
Accessories: Advanced panel + CO_2 sensor/motion sensor + damper
Result: Increased air flow rate in zones that need it

www.flexit.com

10. Dimensioned drawing S4

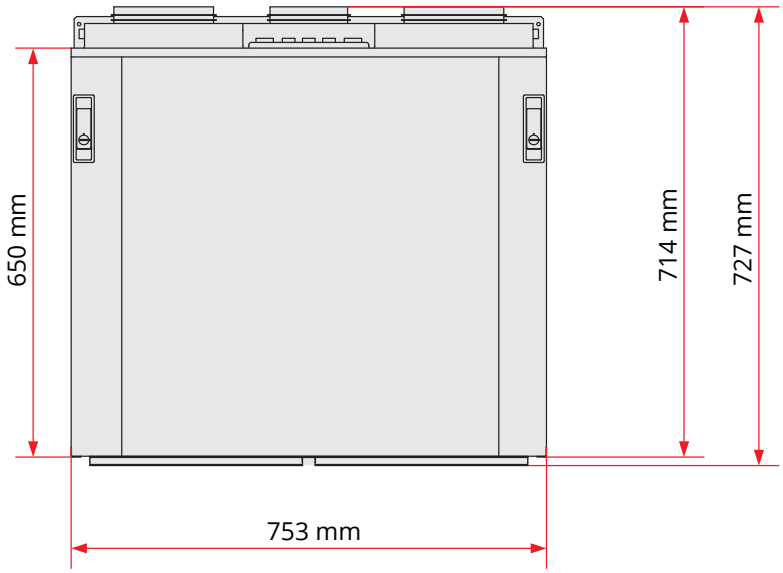

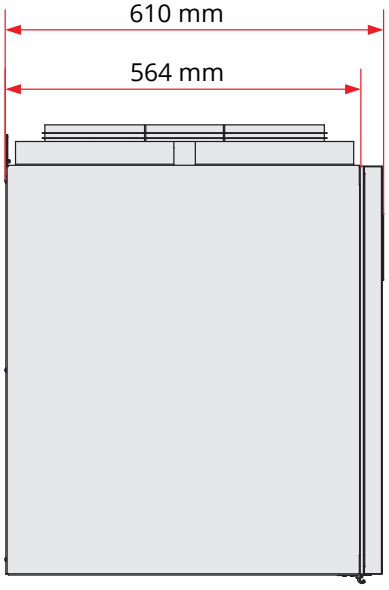

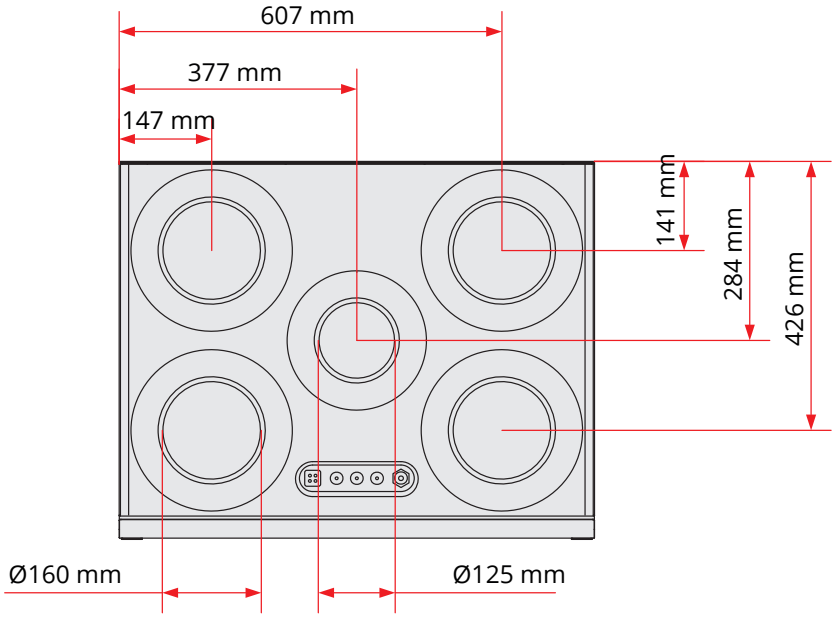

11. Capacity and sound data S4

11.1. SUPPLY AIR SIDE L

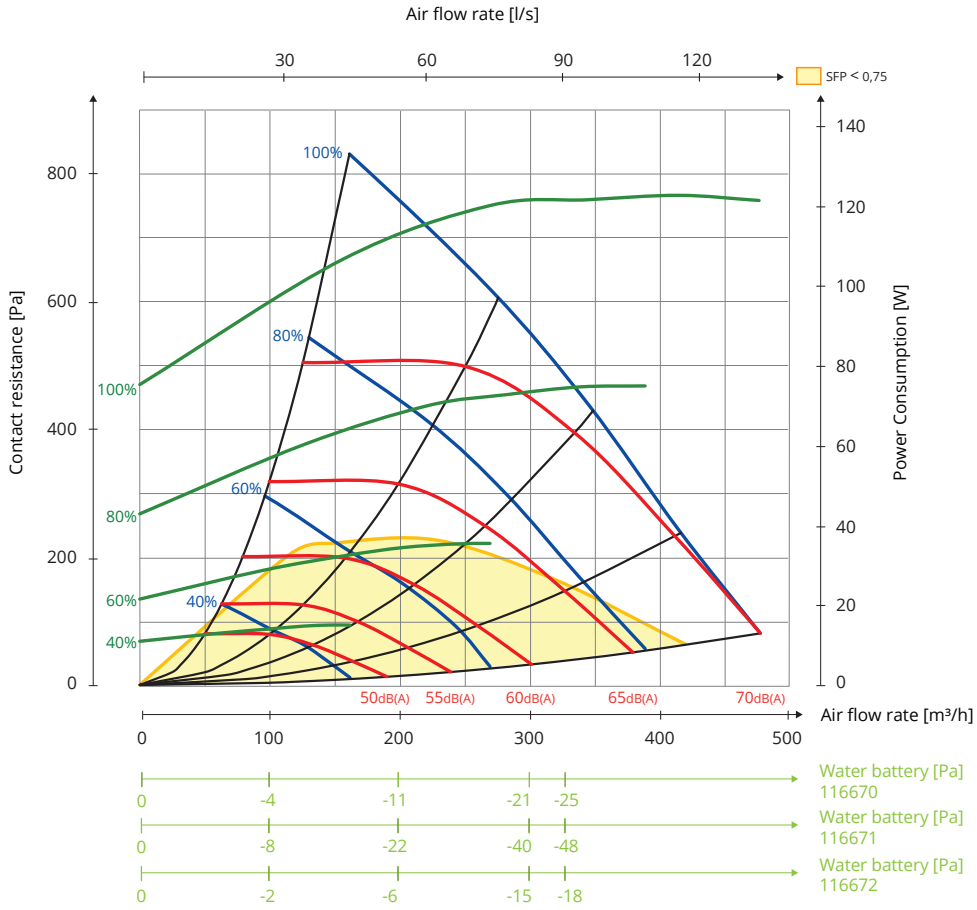

11.2. EXTRACT AIR SIDE L

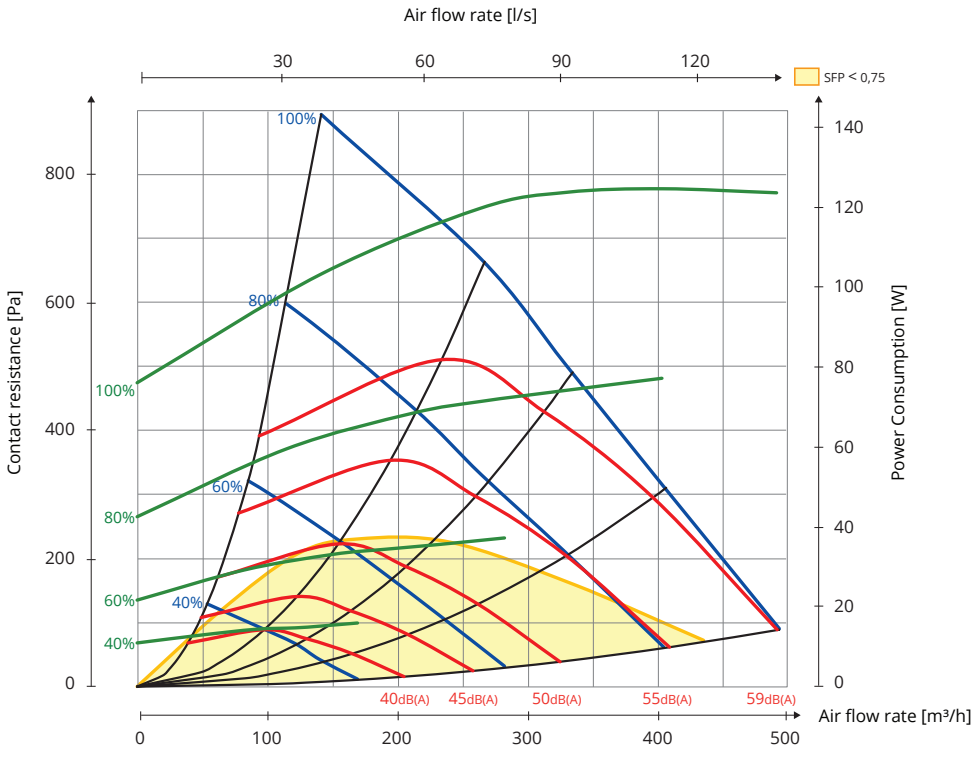

Explanation of diagram:
Sound data is specified as sound power level LwA in the capacity diagrams. (This is sound to duct.)

These values can be corrected by means of the table for the different octave bands in order to look at Lw (without adaptation to A band).

The correction table for the various octaves is stated in Lw, which means that the Lw values are after conversion of each octave for supply air and extract air.

Radiated sound from the unit must be calculated from the supply air diagram.

Data for supply air is measured in accordance with ISO 5136, the "In-duct method".
Radiated noise is measured in accordance with ISO 9614-2. Bruel & Kjær measuring equipment, type 2260.

11.3. CORRECTION FACTOR FOR LW (LEFT)

Hz	63 Lw(dB)	125 Lw(dB)	250 Lw(dB)	500 Lw(dB)	1000 Lw(dB)	2000 Lw(dB)	4000 Lw(dB)	8000 Lw(dB)	LwA (dBA)
Supply air	5	4	2	-3	-7	-8	-16	-23	
Extract air	8	8	6	-5	-13	-15	-24	-26	
Radiated	-8	-13	-18	-27	-32	-29	-33	-36	-21

Working point 240 m³/h against100 Pa.

> EXAMPLE 1

Sound to duct in the various octaves is stated in Lw

The working point gives 60 dBA from the capacity diagram for supply air. I am interested in what this is specifically in the 250 Hz range.

60 dBA+2=62 dB which is an Lw value (sound power level without adaptation to the ear's A band)

> EXAMPLE 2

Radiated sound in Lw per octave

If a reading of 60 dBA at the working point is taken from the supply air capacity diagram (which indicates sound to duct) in order to arrive at a subsequent Lw value for the various octaves, a deduction is then made from the value for the relevant octave for the row with radiated sound.

60 dBA-27 (for 500 Hz) = 33 dB, which is an Lw value and indicates the radiated sound from the unit in this octave.

> EXAMPLE 3

Radiated sound in total from the unit in LwA

At the bottom right of the table, a total value for radiated sound from the unit is stated in LwA. This is an aggregate value.
The values for the radiated sound for the different octaves have been totalled up and then corrected for A band.

This is used as follows:
The LwA value is read from the supply air capacity diagram, in our example 60 dBA, and this is then subtracted from the total value (this is also an LwA value).
LwA 60 dBA-21 dBA = 39 dBA (which is then stated in LwA, the sound power level adapted to the ear's A band).

11.4. SUPPLY AIR SIDE R

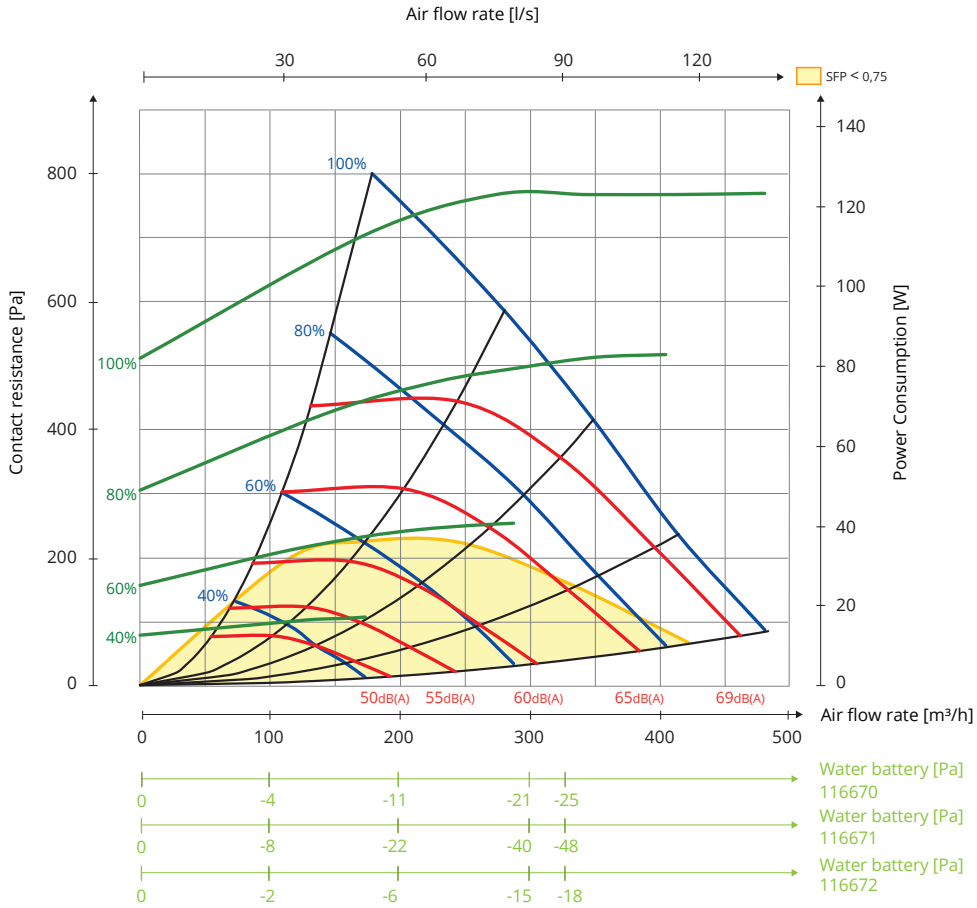

11.5. EXTRACT AIR SIDE R

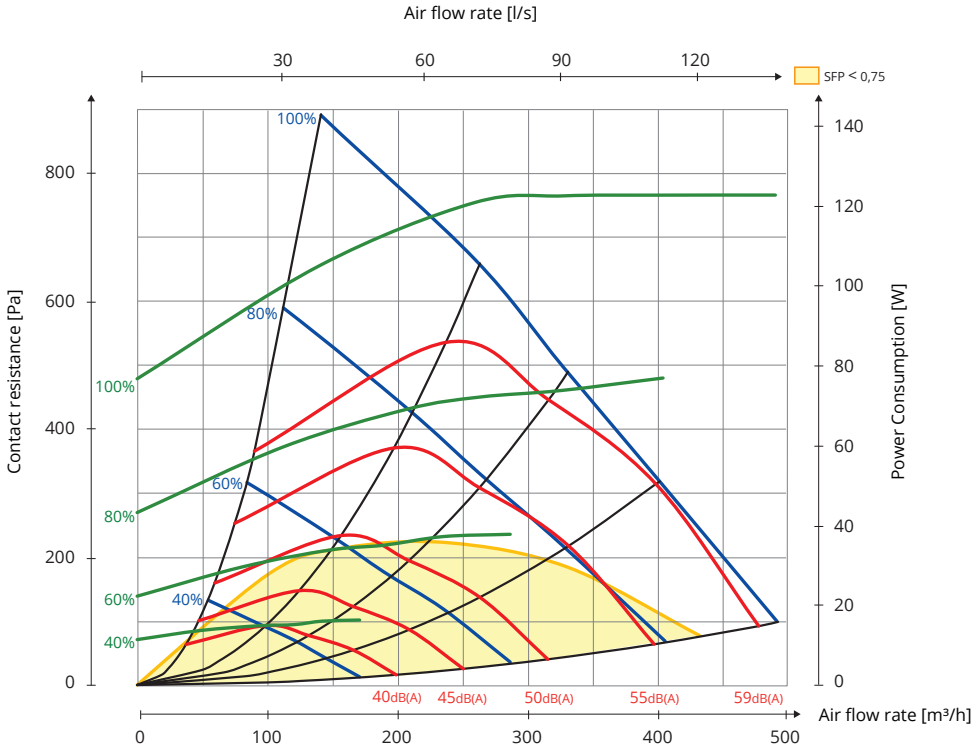

Explanation of diagram:
Sound data is specified as sound power level LwA in the capacity diagrams. (This is sound to duct.)

These values can be corrected by means of the table for the different octave bands in order to look at Lw (without adaptation to A band).

The correction table for the various octaves is stated in Lw, which means that the Lw values are after conversion of each octave for supply air and extract air.

Radiated sound from the unit must be calculated from the supply air diagram.

Data for supply air is measured in accordance with ISO 5136, the "In-duct method".
Radiated noise is measured in accordance with ISO 9614-2. Bruel & Kjær measuring equipment, type 2260.

11.6. CORRECTION FACTOR FOR LW (RIGHT)

Hz	63 Lw(dB)	125 Lw(dB)	250 Lw(dB)	500 Lw(dB)	1000 Lw(dB)	2000 Lw(dB)	4000 Lw(dB)	8000 Lw(dB)	LwA (dBA)
Supply air	3	4	2	-2	-8	-8	-16	-23	
Extract air	8	8	5	-8	-11	-15	-24	-26	
Radiated	-9	-13	-18	-28	-32	-29	-34	-37	-21

Working point 240 m³/h against100 Pa.

> EXAMPLE 1

Sound to duct in the various octaves is stated in Lw

The working point gives 60 dBA from the capacity diagram for supply air. I am interested in what this is specifically in the 250 Hz range.

60 dBA+2=62 dB which is an Lw value (sound power level without adaptation to the ear's A band)

> EXAMPLE 2

Radiated sound in Lw per octave

If a reading of 60 dBA at the working point is taken from the supply air capacity diagram (which indicates sound to duct) in order to arrive at a subsequent Lw value for the various octaves, a deduction is then made from the value for the relevant octave for the row with radiated sound.

60 dBA-28 (for 500 Hz) = 32 dB, which is an Lw value and indicates the radiated sound from the unit in this octave.

> EXAMPLE 3

Radiated sound in total from the unit in LwA

At the bottom right of the table, a total value for radiated sound from the unit is stated in LwA. This is an aggregate value.
The values for the radiated sound for the different octaves have been totalled up and then corrected for A band.

This is used as follows:
The LwA value is read from the supply air capacity diagram, in our example 60 dBA, and this is then subtracted from the total value (this is also an LwA value).
LwA 60 dBA-21 dBA = 39 dBA (which is then stated in LwA, the sound power level adapted to the ear's A band).

12. Final checks/Starting

12.1. FINAL CHECKS

Check the following points: ✓

Description	Chapter	Performed
Duct insulation has been carried out in accordance with the manual and technical documents	3	
Ducts have been connected to the correct nipples	8	
Adjustment has been carried out in accordance with the manual and project engineering documents	-	
The unit operates normally in all stages	-	
The rotor rotates freely	-	
Rotor rotates when heating is required	-	
Heating comes on	-	
Unit has filters for both outdoor air and extract air	8	

12.2. STARTUP

Flexit GO app



For installer, see startup guide (116628).

For end user, see startup guide (116908).

Using the Flexit GO app:
Alt. 1: Connect the unit to the home's router.
Alt. 2: Connect the unit to its own access point, see manual 116734.

- Connect the unit's power cable.
- The unit will now start.
- The unit will automatically carry out a startup procedure lasting approx. 3 min.
- Check that the app is connected to your unit. If not, follow the connection instructions in the startup guide for end user (116908).
- After the startup procedure the unit will follow the factory default operating settings.
- The settings can be changed using the app.
- Make sure that adjustment has been carried out in accordance with the manual and project engineering documents (ventilation data documentation).

Startup guide (installer)

Startup guide (end user)

NordicPanel
(accessory)



See manual (120018).

For use with a control panel (accessory):

- Check that the control panel has been wired up and connected to the unit according to the manual (120018).
- Connect the unit's power cable.
- The unit will now start.
- The unit will automatically carry out a startup procedure lasting approx. 3 min.
- After the startup procedure the unit will follow the control panel's default settings.
- The settings can be changed from the control panel.
- Make sure that adjustment has been carried out in accordance with the manual and project engineering documents (ventilation data documentation).

NordicPanel can be fitted to Nordic air handling units manufactured after 1 October 2022.

Just check for a cable on top of the unit marked "NordicPanel".
You can also install NordicPanel on older units manufactured between May 2019 and September 2022. All you need is a cable kit. Contact your nearest dealer for more information.

Installation instructions NordicPanel

13. Complaints

Warranty claims will only be valid if the instructions in the manuals have been followed.

Complaints about this product may be raised in accordance with the applicable terms of sale, **provided that the product has been used and maintained correctly.** The right of complaint may be voided if the system is used incorrectly or maintenance is grossly neglected.

Complaints as a result of incorrect or defective installation must be submitted to the installation company responsible.

Filters are consumables.

Our products are subject to continuous development and we therefore reserve the right to make changes.

We also disclaim liability for any printing errors that may occur.

14. Waste handling



The symbol on the product shows that this product must not be treated as household waste. It must be taken to a collection point for recycling electrical and electronic equipment.

By ensuring correct disposal of the equipment, you will help to prevent the negative consequences for the environment and health that incorrect handling may entail.

For further information on recycling this product, please contact your local authority, your refuse collection company or the company from which you purchased it.

EUROVENT CERTIFIED PERFORMANCE
RAHU 19.12.007
www.eurovent-certification.com

Flexit participates in the ECP programme for RAHU.
Check ongoing validity of certificate:
www.eurovent-certification.com

The product is listed in the database for building products that can be used in **Nordic Swan Ecolabelled buildings.**

FLEXIT®

Flexit AS, Moseveien 8, N-1870 Ørje
www.flexit.com