117201EN-04
2023-05



EUROVENT CERTIFIED PERFORMANCE
RAHU 19.12.007
www.eurovent-certification.com

Nordic S2

Flexit GO

ART.NO. 800110, 800111, 800112, 800113

EN

USER MANUAL

Air handling unit

Contents

1. Automatic control 6
2. Functional description of balanced ventilation 7
   2.1. Fans (M1, M2) 7
   2.2. Filters (FI1, FI2) 7
   2.3. Rotor (HR-R) 7
   2.4. Heating element (EB) 7
   2.5. Temperature sensors (B1, B4) 7
   2.6. For use with dampers 7
      2.6.1. Damper (DA1) 7
      2.6.2. Damper (DA2) 7
   2.7. Kitchen fan 7
3. Operating the door 8
   3.1. If a door needs to be removed 9
4. Cleaning and maintenance 10
   4.1. Cleaning the fans 10
   4.2. Changing the filters 11
   4.3. Changing the brush strips 13
   4.4. Cleaning the rotor 15
   4.5. External cleaning 15
5. Maintenance table 16
6. Troubleshooting 17
7. Complaints 18
8. Waste handling 18

Symbols used

These products bear a number of symbols used for labelling the actual product and in installation and user documentation.


Supply air


Extract air


Extract air from kitchen


Exhaust air


Outdoor air


DANGER: ELECTRICITY


DANGER! DO NOT TOUCH

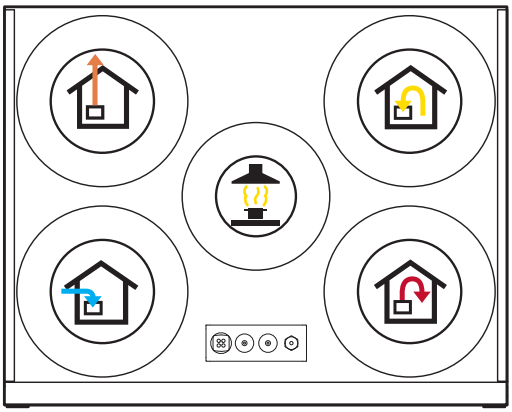
FRONT

EXAMPLE OF NIPPLE LOCATIONS (shown as left model)

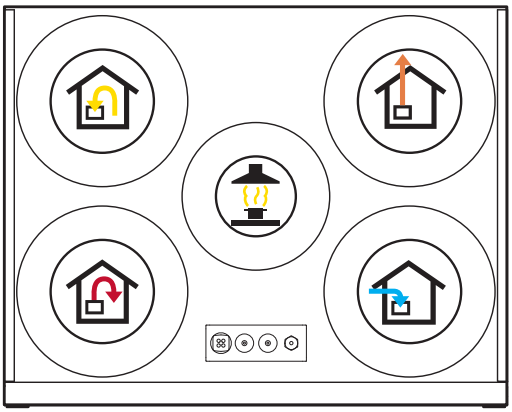
FRONT

EXAMPLE OF NIPPLE LOCATIONS (shown as a right model)

DANGER! When a text box is this colour, it means that a life-threatening or serious personal injury may be the consequence of not following the instructions.

NOTICE! When a text box is this colour, it means that a poor utilisation ratio or product operating issues may be the consequence of not following the instructions.

CAUTION! When a text box is this colour, it means that material damage may be the consequence of not following the instructions.

INFO! When a text box is this colour, it means that it contains important information.

FLEXIT

SAFETY INSTRUCTIONS

- To avoid the risk of fire, electric shock or injury, read all the safety instructions and warning texts before using the unit.
- All electrical connections must be carried out by qualified electricians.
- If the power lead is damaged, it must be replaced by the manufacturer, the manufacturer's service agent or a similarly qualified person.
- The unit must not be used to extract combustible or flammable gases.
- It is the installer's responsibility to carry out a full safety and function assessment of the appliance.
- Before opening the door: switch off the heat, let the fans continue for 3 minutes to remove hot air, unplug the unit and wait 2 minutes before opening the doors, as the unit contains elements that must not be touched when hot.
- This appliance may be used by children of 8 years or above or by persons with reduced sensory capacity or reduced physical or mental capacity, or by persons lacking experience or knowledge, provided they have received instruction in the safe use of the appliance or are supervised to ensure safe use and providing they are aware of the risks.
- The product is not suitable for use by children. Children must not be allowed to play with the appliance. Children must not carry out cleaning or maintenance without supervision.

- That precautions must be taken to avoid the back-flow of gases into the room from the open flue of gas or other fuel-burning appliances (for duct and partition fans).

- This unit is only designed for ventilation air in homes and commercial buildings.
- To maintain a good indoor climate, comply with regulations and avoid condensation damage, the unit must never be stopped apart from during service/ maintenance or in connection with an accident.
- The unit must not be operated without the filters being in place.
- All plumbing work must be carried out by an authorised plumber.
- The location of the water battery must be approved by a plumber owing to the risk of water leaks.

- Tumble dryers must not be connected to the unit.
- The room must have a separate, adequate air supply when products such as gas cookers, gas heaters, fireplaces, wood-burning stoves, oil-fired boilers, etc., are used.

1. Automatic control

These instructions only describe how to use the ventilation unit and do not go into the details of installing/using automatic control.
There are also automatic functions on the product which, if necessary, can override the selected operating mode of the product.

For more information on the automatic control system, see www.flexit.com.

User manual
Flexit GO

- Flexit GO app
  To control the ventilation unit via a smartphone/tablet, download the app from Google Play or the App Store. See startup guide for installer (116628) and startup guide for end user (116908).

- NordicPanel control panel (accessory)
  See manual (120018).

Flexit GO-app



Google Play

App Store

For installer, see startup guide (116628).
For end user, see startup guide (116908).

NordicPanel control panel

(accessory)



Installation instructions NordicPanel

NordicPanel can be fitted to Nordic air handling units manufactured after 1 October 2022.

Just check for a cable on top of the unit marked "NordicPanel".
You can also install NordicPanel on older units manufactured between May 2019 and September 2022. All you need is a cable kit. Contact your nearest dealer for more information.

2. Functional description of balanced ventilation

2.1. FANS (M1, M2)

The fans ensure that air enters and leaves the building. They can be individually adjusted for optimal operation. The unit can be regulated at 3 different speeds via the control panel: Home, Away, High.

2.2. FILTERS (FI1, FI2)

Filters with a high filter grade are used as standard for both supply air and extract air so that the air which enters the building is clean. The filters also ensure that the unit stays clean and can maintain thermal efficiency and air flow.

2.3. ROTOR (HR-R)

The air passes through the rotary wheel-type heat exchanger (recovery system). The rotor functions as a heat magazine. The heat from the extract air heats up one part of the rotor. When the heated part comes over to the supply air side, the heat is transferred to the supply air.

2.4. HEATING ELEMENT (EB)

If the energy recovered from the extract air is insufficient to maintain the set supply air temperature, an electric heating element will help raise the temperature. The heating element is protected against overheating by the thermostat (F20) which cuts out at high temperature. For extra safety, the thermostat (F10) cuts out at critical temperatures. Thermostat F10 needs to be reset manually by pressing the reset button. See chap. Reset button on page 17.

2.5. TEMPERATURE SENSORS (B1, B4)

As standard, the unit has four temperature sensors. Supply air sensor (B1) registers the temperature after the heating battery. The extract air sensor (B3) registers the temperature of the extract air. The outdoor air sensor (B4) registers the temperature of the outdoor air. The exhaust air filter (B6) registers the temperature of the exhaust air.

2.6. FOR USE WITH DAMPERS

2.6.1. Damper (DA1)

There is a closing air damper in the exhaust air duct to prevent cold draughts.

2.6.2. Damper (DA2)

There is a closing air damper in the outdoor air duct to prevent cold draughts.

If a water battery is used, the damper prevents frost damage to the battery.

! Adjustment must always be carried out by qualified staff before the installation is used for the first time.

2.7. KITCHEN FAN

To reduce the risk of negative pressure in the home, when using a kitchen fan with an air volume above approx. 200m³/h is compensated for this with, for example, an outdoor air valve in the wall.

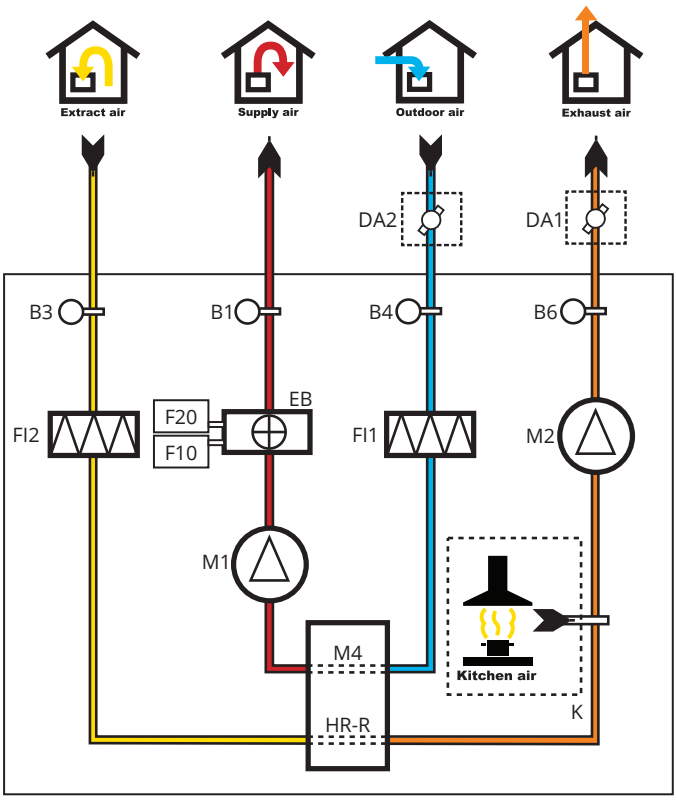

3. Operating the door

1. Turn the screw in the lock 90°.
2. Flip up the lock handle
3. The lock handle needs to be lifted right up to release. Therefore press the lock handle right up while opening the door.

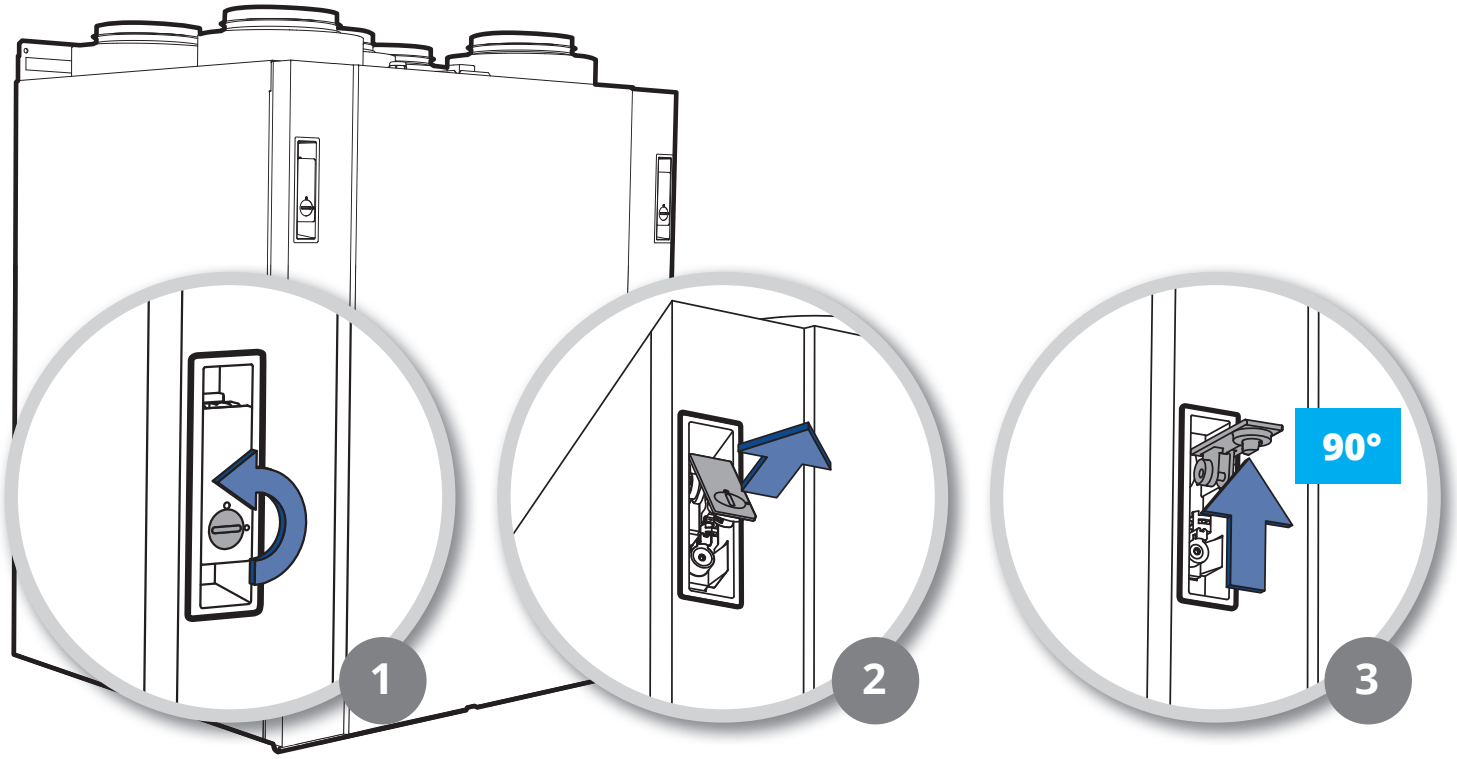

3.1. IF A DOOR NEEDS TO BE REMOVED

The door can be lifted off when it is open between 40° and 105° (see Fig. 1).
If there is limited space in front of the unit, the lock screw on the underside of the unit can be unscrewed (see Fig. 2) and the door pushed out sideways (see Fig. 3). In this case it can be open less than 40°.

The door weighs 6 kg – take care when removing it.

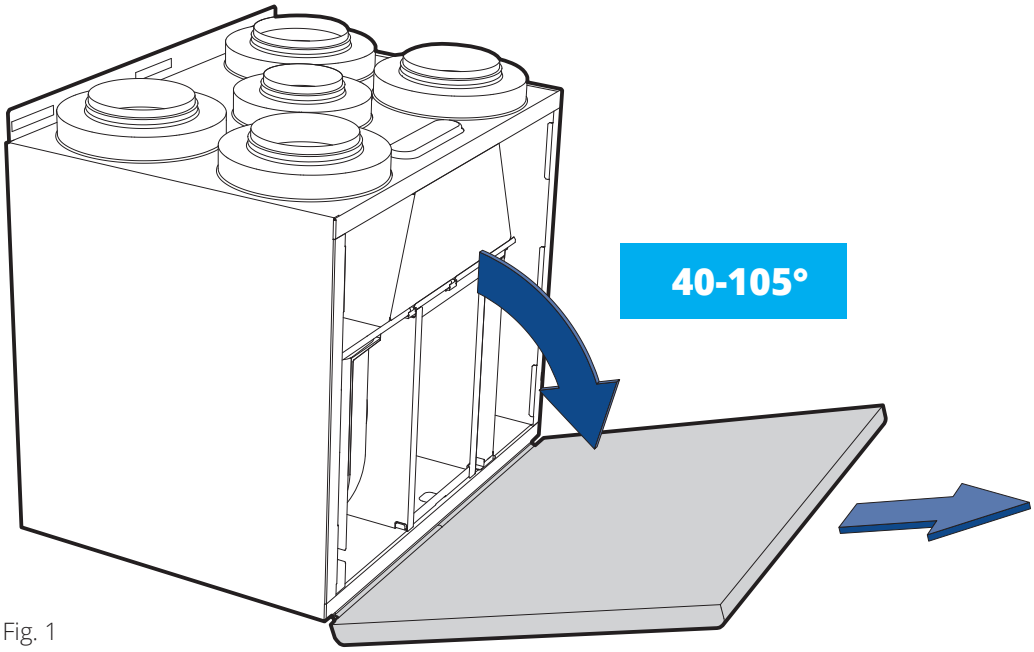

Fig. 1

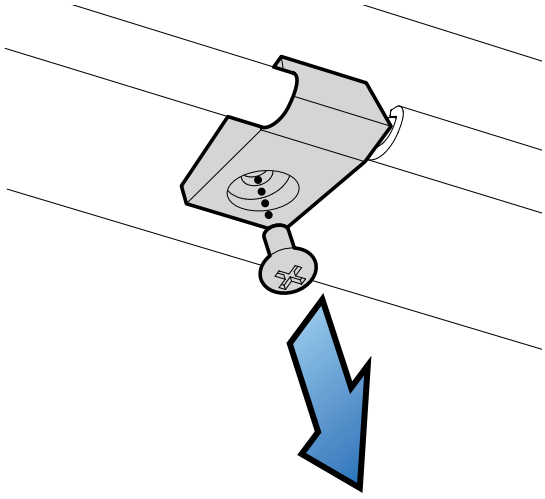

Fig. 2

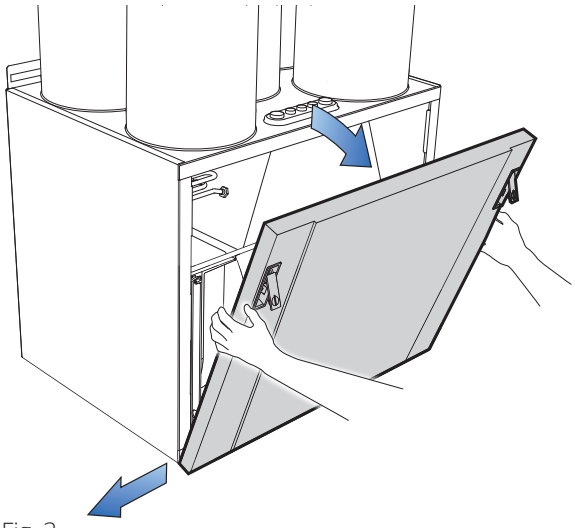

Fig. 3

4. Cleaning and maintenance

Before opening the door: Switch off the heat, let the fans continue for 3 minutes to remove hot air, unplug the unit and wait 2 minutes before opening the doors.

4.1. CLEANING THE FANS

Clean the fans at the time intervals specified in chap. 5. Maintenance table on page 16. Clean the fan blades with a grease solvent on a cloth (e.g. methylated spirits) and compressed air if possible.
NB: Take care that the motor is not exposed to water.

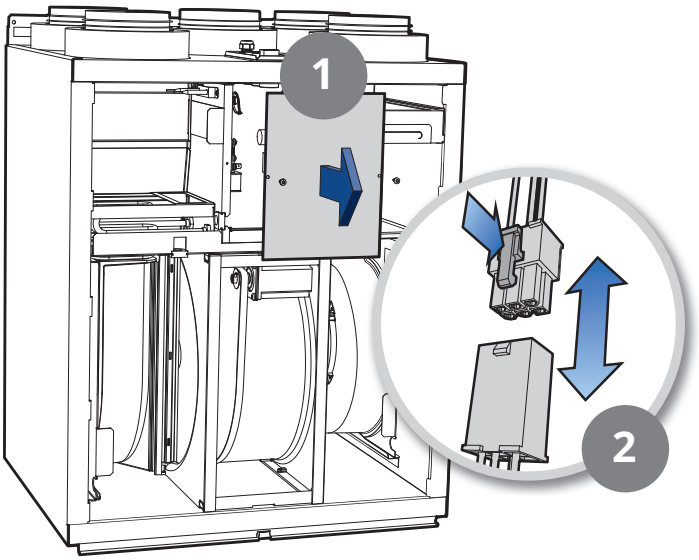

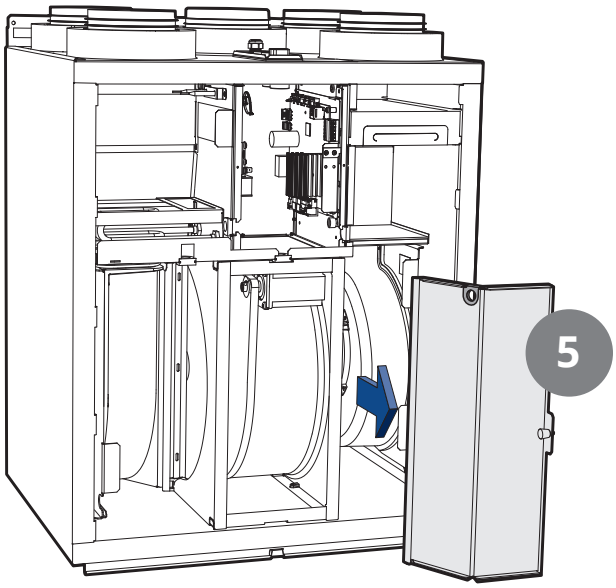

To avoid accidental swapping of the fans, it is recommended that only one fan is switched off at a time.

To take out the fans:
1. Undo the screws on the electric cover and take the cover off.
2. Disconnect the electric quick-release contact by pressing in at the same time as pulling the contact apart.
3. Remove the plug from the fan compartment cover.
4. Pull the cable bushing on the fan compartment cover out of the groove so that the cable with quick-release contact comes too.
5. Remove the cover from the fan compartment.
6. Pull the remainder of the fan cable bushing out of the grooves so that the cables with quick-release contacts come too.
7. Remove the fan.

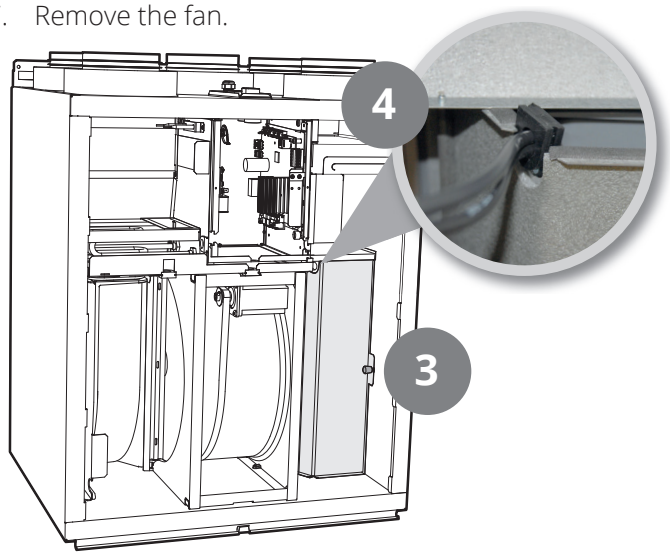

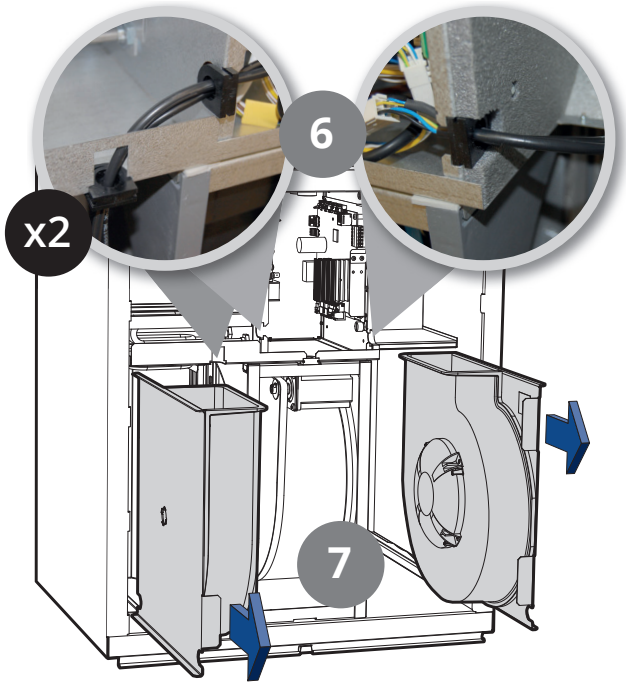

FLEXIT

4.2. CHANGING THE FILTERS

The filters have a limited life, and to preserve a healthy indoor air quality it is important to change them when they are dirty.

How often the filters need to be changed depends on the degree of contamination of the air where they are installed. In general, the filters need to be changed at least once a year, preferably in the autumn (after the pollen season). In areas with a lot of dust and contamination, the filters should be changed in the spring and autumn.

Dirty filters can, among other things, lead to:
- Reduced performance of the unit
- The unit becoming dirty
- Humidity damage
- Reduced indoor air quality

A filter subscription is recommended to ensure full benefit from the system.



It is important to use a Flexit original filter.

If you use a filter other than a Flexit original filter, the ventilation unit may not work as intended. Flexit therefore accepts no liability for any operating faults.



Change both filters (supply air and exhaust air) at the same time.



Make sure that the filter is not damaged during fitting. A damaged filter reduces the unit's power and air purity.



Check that the filter's seal is intact before inserting the filter.
Then push the filter properly into place to prevent air leakage.



CAUTION! The unit must not be used without a filter.



Clogged filters may reduce heat recovery in the ventilation unit and cause humidity damage.

Please note that a complaint may be rejected if you use a filter other than an original Flexit filter.
For the right filter, see 'Accessories' under your unit on Flexit's website.

To take out the filters:

1. Press the outer part of the cover inwards and move to the side.
2. Pull out the cover.
3. Grip the handles and pull the filters out. Insert the new filters.

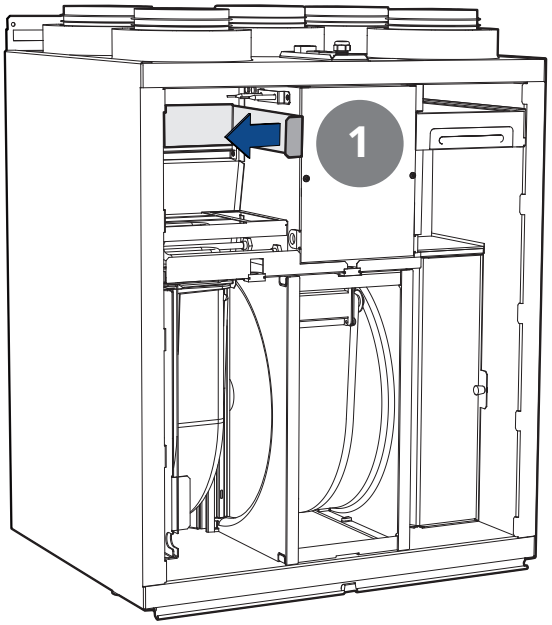

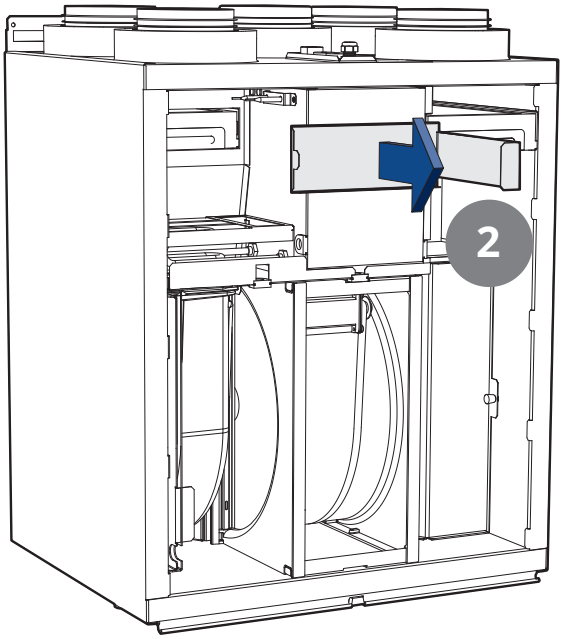

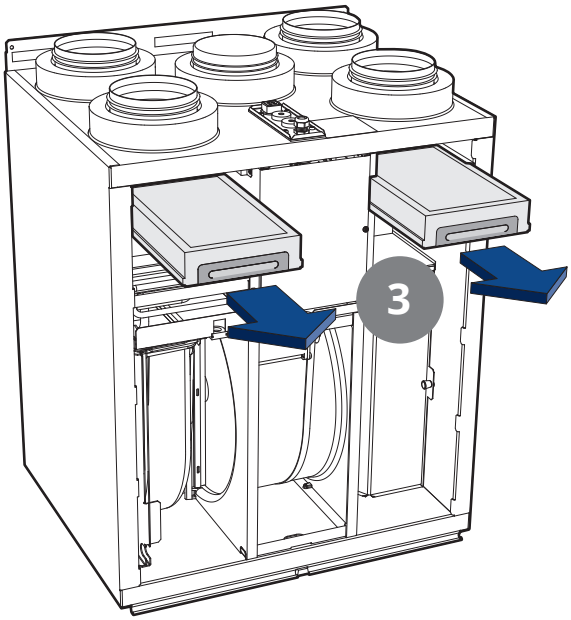

4.3. CHANGING THE BRUSH STRIPS

The brush strips become worn over time. If they do not lie tightly against the rotary exchanger, it may be necessary to change them.
Alternatively, they may be moved closer to the rotor, as the profile they are mounted in has two grooves.

Proceed as follows:

1. Undo the screws on the electric cover and take the cover off.

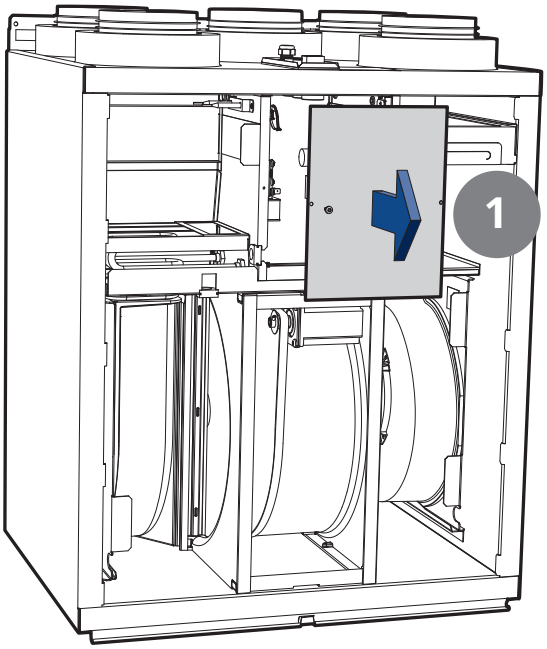

2. Disconnect the rotor's quick-release contact from the circuit board.
3. Pull out the cable lug to disconnect the earth from the circuit board.

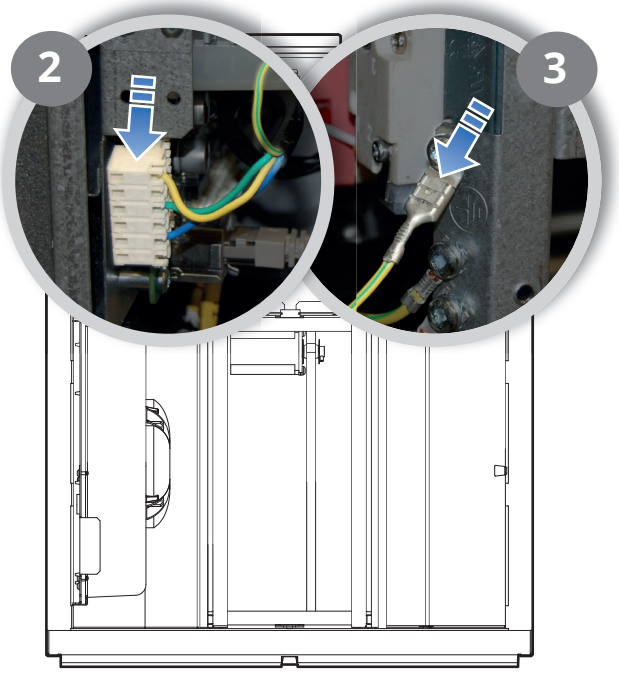

4. Pull the rotor module approximately 2-3 cm out.
5. Pull the cable bushing over the middle of the rotor out of the groove so that the cable with the quick-release contact comes too.

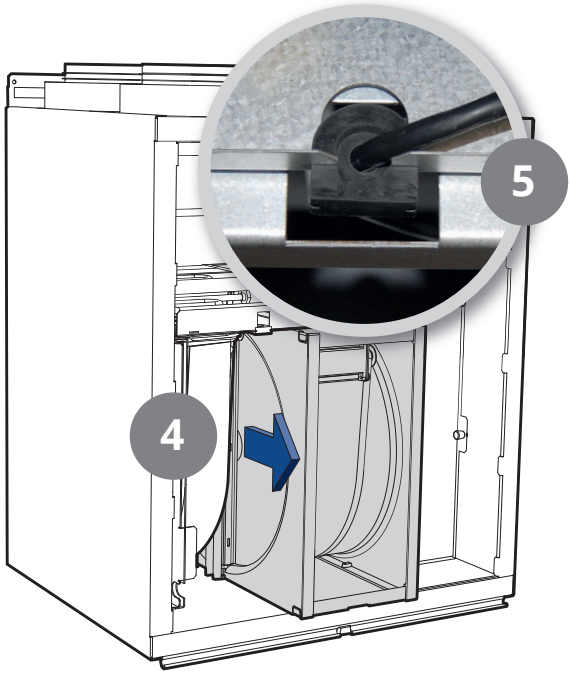

6. Pull the rotor module right out and position it with the brush strips facing up.

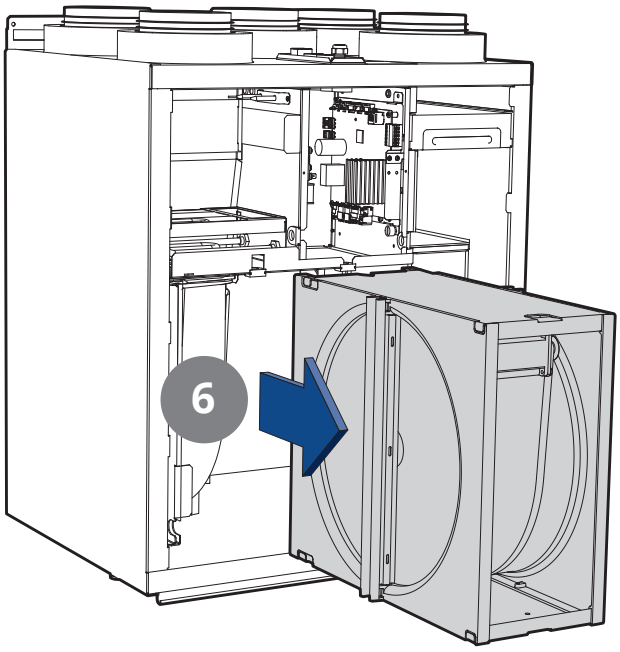

7. Undo the screw in the centre of the steel profile. Release the top of the sealing strip so that the profile can be removed.

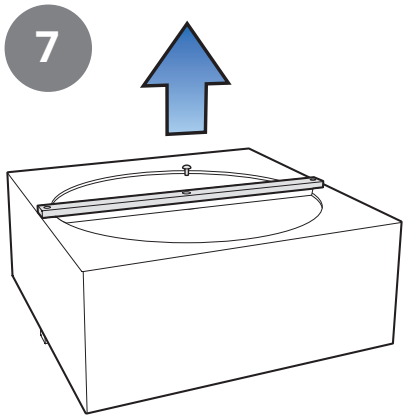

8. Flip off the brush strip profiles with a screwdriver, etc. There are 4 brush strips on the rotor, 2 on each side. Use a broad screwdriver, so you can get a good contact without bending the profile. Start at one end and continue to the other. Lift it carefully, bit by bit.

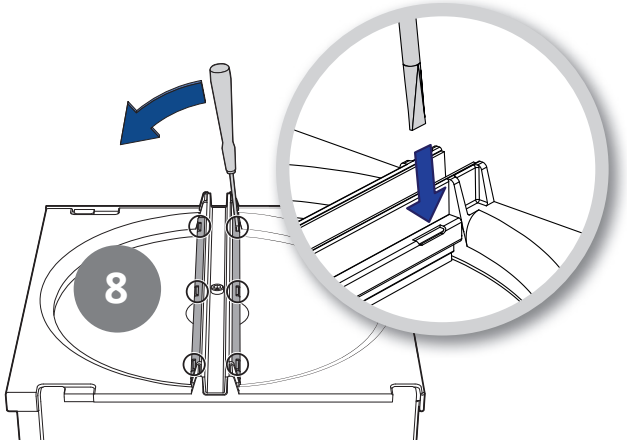

9. Pull the brush strips out of the groove.
10. Move the brush strips down to level 2, or replace them with new ones if they are completely worn out.

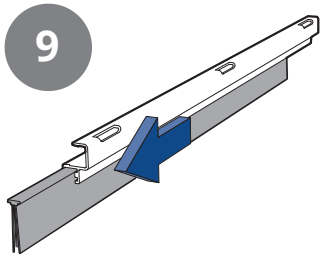

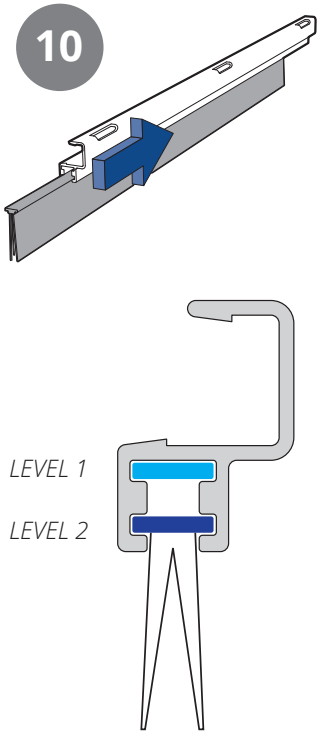

11. Press the brush strip profile back into place.

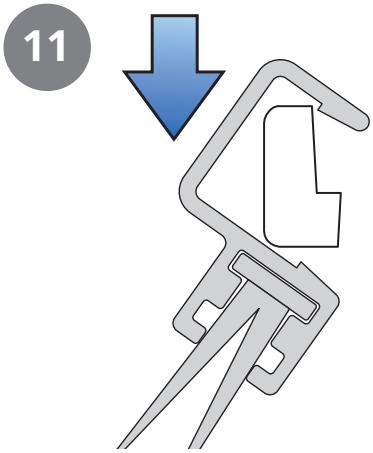

12. Then screw the steel profile back on. Press the sealing strip towards the short end of the steel profile to form a seal. The profile also has a sealing strip along one side.

It is important to screw the profile on the right way so that the seal sits tightly against the partition inside the unit.

13. Push the rotor back in.

12

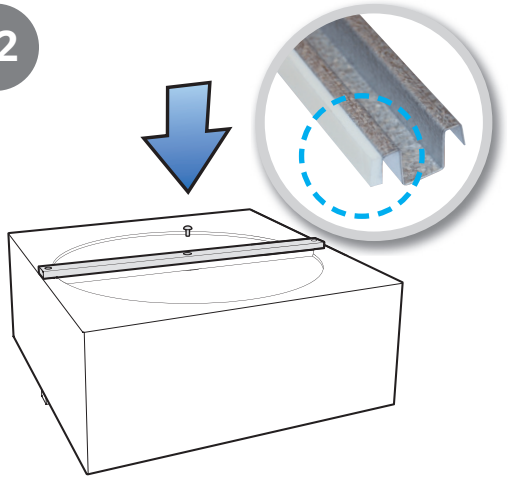

13

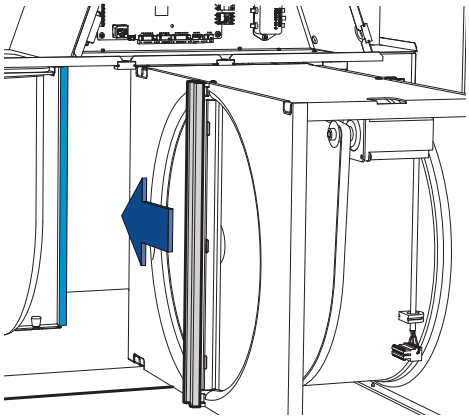

4.4. CLEANING THE ROTOR

A high-impermeability filter is installed in the unit.
It is not therefore usually necessary to clean the rotor. If, for any reason, it should still be necessary, dust can be removed with a soft brush.
Further cleaning is possible by removing the rotor, spraying it with a grease solvent and then blowing it clean from the opposite side. Distance approximately 60 mm and max. pressure 8 bar.
Ensure that the motor is not exposed to water during cleaning. Ensure that all seals around the rotor are intact and tight. Ensure that there is no damage to the rotor belt, and that the rotor rotates freely.

4.5. EXTERNAL CLEANING

Many kitchen surface cleaners contain chemicals that may damage the product's plastic components. Therefore use a soft cloth moistened with warm water and a neutral detergent to clean the outside of the product.

Do not use sharp objects, powerful cleaners or scouring powder, as such products can damage the surfaces.

Cleaners containing ammonia or citrus must not be used. Products that give stainless steel an anti-fingerprint coating must not be used either.

5. Maintenance table

Component	Action	Interval
Filter	Filters must be changed at least once a year. It is best to change them twice a year, before and after the pollen season. Check that the filter seal is completely tight. As standard, a maintenance reminder to change the filter will appear every 6 months.	6-12 months
Fans	The fan in a unit connected to a kitchen hood should be inspected once a year. For a fan in a unit that is not connected to a kitchen hood, inspection every 3 years is sufficient. The fans should be cleaned as needed.	12 months 3 years
Recovery system	Check that the surfaces are clean. Check that the sealing strips face in towards the rotary wheel-type heat exchanger. Check that the rotor belt is intact and not too slack.	3 years
Kitchen fan	For a unit with exhaust from a kitchen fan connected: Wash the grease filter. Check that the damper is clean and closes fully.	2 weeks
Seals	Check that the seals on the door, under the filters, on the fan modules and on the rotor module are intact.	12 months
Valves	The supply air and extract air valves (for the bathroom, bedroom, laundry room, etc.) must be cleaned at least once a year.	12 months
Air intake	Check that no leaves or other items have caught in the grille. The air intake can freeze up in winter and should be checked regularly (daily if necessary). If necessary, it must be scraped clean so that the air can pass through.	12 months
Roof cowl	If the unit has a roof cowl, this must be checked for leaves and the like. Also check that the drain slots are open.	12 months
Ducts	Check that the ducts are clean. Clean if necessary.	6 years
Brush strips	Check that the brush strips are intact and sit tightly against the rotor. If they are worn, they can be moved to the next groove in the profile so that they are closer to the rotor.	3 years
Inside unit	A combination of a very low outside temperature and damp extract air can lead to the formation of ice. Normally this will not be a problem – when normal operating conditions return the ice crystals will be converted to steam and removed from the unit via the exhaust air. In the case of extreme cold over extended periods the unit should be checked for ice.	

6. Troubleshooting

Type of fault	Remedial action
Cold draughts	Check which supply temperature has been selected. See control panel.
	Check that the rotor rotates.
	Check that heating comes on.
	New extract filter needed.
Fans not working	Check that power is connected to the unit.
	Check that the overheating thermostat has not cut out.
	Restart the overheating thermostat by pressing the button*. Must also be reset in the app or on the control panel.
Low air flow rate	Check what speed the unit is set to.
	Check that the filters are tight.
	Check the intake grille.

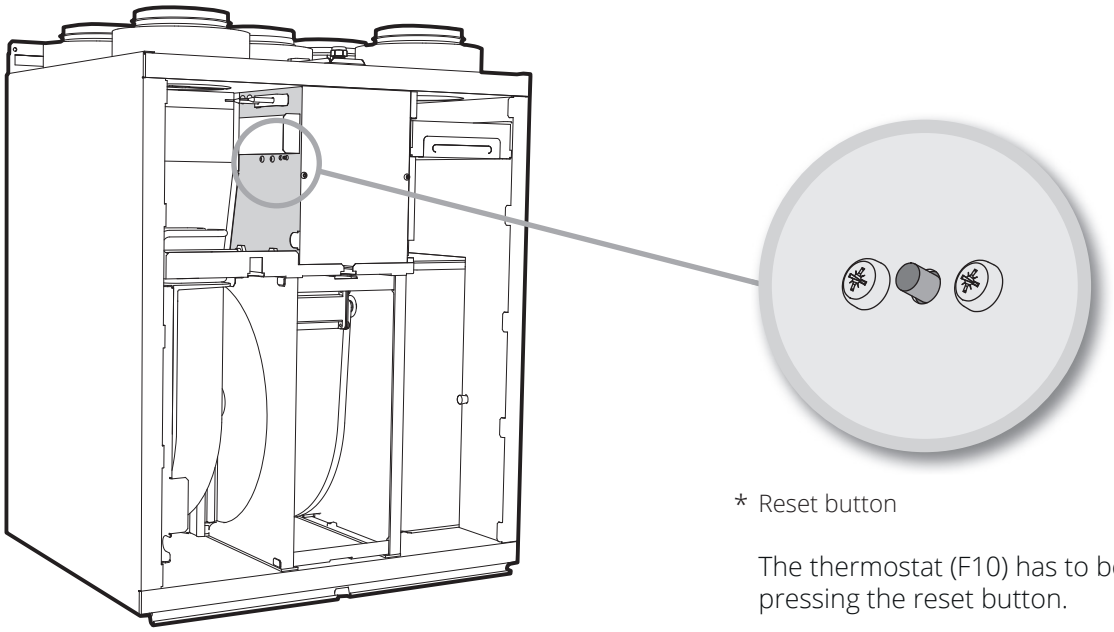

(left model)

* Reset button

The thermostat (F10) has to be reset manually by pressing the reset button.

7. Complaints

Warranty claims will only be valid if the instructions in the manuals have been followed.

Complaints about this product may be raised in accordance with the applicable terms of sale, **provided that the product has been used and maintained correctly.** The right of complaint may be voided if the system is used incorrectly or maintenance is grossly neglected.

Complaints as a result of incorrect or defective installation must be submitted to the installation company responsible.

Filters are consumables.

Our products are subject to continuous development and we therefore reserve the right to make changes.

We also disclaim liability for any printing errors that may occur.

8. Waste handling



The symbol on the product shows that this product must not be treated as household waste. It must be taken to a collection point for recycling electrical and electronic equipment.

By ensuring correct disposal of the equipment, you will help to prevent the negative consequences for the environment and health that incorrect handling may entail.

For further information on recycling this product, please contact your local authority, your refuse collection company or the company from which you purchased it.



Flexit osallistuu asuntoilmastoinnin ECP-ohjelmaan.
Tarkista sertifioinnin voimassaolo:
www.eurovent-certification.com

The product is listed in the database for building products that can be used in **Nordic Swan Ecolabelled buildings.**

FLEXIT®

FLEXIT AS, Moseveien 8, 1870 Ørje, Norway
www.flexit.com