Safety instructions

121051EN-03
2026-01

www.flexit.com



Nordic CL3
Art.no. 800200 (RER)
Art.no. 800201 (REL)

EN

INSTALLATION INSTRUCTIONS

Air handling unit Nordic CL3



www.flexit.com



Nordic CL3
Art.no. 800200 (RER)
Art.no. 800201 (REL)

EN

USER MANUAL

Air handling unit Nordic CL3

Symbols used

These products bear a number of symbols used for labelling the actual product and in installation and user documentation.



DANGER: ELECTRICITY



DANGER! DO NOT TOUCH

DANGER! When a text box is this colour, it means that a life-threatening or serious personal injury may be the consequence of not following the instructions.

NOTICE! When a text box is this colour, it means that a poor utilisation ratio or product operating issues may be the consequence of not following the instructions.

CAUTION! When a text box is this colour, it means that material damage may be the consequence of not following the instructions.

INFO! When a text box is this colour, it means that it contains important information.

SAFETY INSTRUKTIONS



- To avoid the risk of fire, electric shock or injury, read all the safety instructions and warning texts before using the unit.
- There is a fire risk if cleaning is not carried out in accordance with the instructions.
- All electrical connections must be carried out by qualified electricians.
- The unit must not be used to extract combustible or flammable gases.
- The air must not be released into extract air ducts used for air extracted from appliances which burn gas or other fuel.
- CAUTION! Accessible parts may become hot when used together with kitchen equipment.
- Do not flame food under the kitchen hood.
- It is the installer's responsibility to carry out a full safety and function assessment of the appliance.
- WARNING! Failure to install the screws or fixing device in accordance with these instructions may result in electrical hazards.
- Follow the current regulations for extract air.
- Before opening the door: The product must be set to service mode and powered off because the unit contains elements that must not be touched when hot. Refer to the user manual for FlexitGO.
- Connection/disconnection to supply mains and interconnection of separate components must be possible.
- It must be possible to disconnect the device after installation, either through an available plug or an all-pole switch on fixed installation.
- This appliance may be used by children of 8 years or above or by persons with reduced sensory capacity or reduced physical or mental capacity, or by persons lacking experience or knowledge, provided they have received instruction in the safe use of the appliance or are supervised to ensure safe use and providing they are aware of the risks.
- The product is not suitable for use by children. Children must not be allowed to play with the appliance. Children must not carry out cleaning or maintenance without supervision.
- That precautions must be taken to avoid the back-flow of gases into the room from the open flue of gas or other fuel-burning appliances (for duct and partition fans).
- The fixing means for attachment to the ceiling such as hooks or other devices shall be fixed with a sufficient strength to withstand 4 times the weight of the air handling unit.



- This unit is only designed for ventilation air in homes and commercial buildings.
- To maintain a good indoor climate, comply with regulations and avoid condensation damage, the unit must never be stopped apart from during service/maintenance or in connection with an accident.
- The unit must not be operated without the filters being in place.
- All plumbing work must be carried out by an authorised plumber.
- The location of the water battery must be approved by a plumber owing to the risk of water leaks.



- Tumble dryers must not be connected to the unit.
- The room must have a separate, adequate air supply when products such as gas cookers, gas heaters, fireplaces, wood-burning stoves, oil-fired boilers, etc., are used.



- If the supply cord is damaged, it must be replaced by the manufacturer, its service agent or similarly qualified persons in order to avoid a hazard.
- **Applicable for Germany market only:** When the range hood and appliances supplied with energy other than electricity are simultaneously in operation, the negative pressure in the room must not exceed 4 Pa (4 × 10-5 bar).

1. Planning and preparation work

1.1. INSPECTION/MAINTENANCE

The unit must be installed with suitable space for servicing and maintenance such as filter replacement and cleaning of fans and rotor.
The control cable with a plug for automation on top of the unit must be easily accessible.

Positioning must comply with individual countries' electrical safety legislation. Check which rules apply in your country.

It may be desirable to turn the unit door. See the units installation instruction chap. 2.4.2. Turning the door page 16.

Ensure there is servicing access to electrical bushings. See the dimensioned drawing in the units installations instructions, chap. 9 page 30 for exact location.

1.2. SPACE REQUIREMENTS

The unit is designed to be installed in boiler rooms, laundry rooms, stores or other suitable areas. The unit can be in a cold location.

There may be a risk of external condensation on the unit if it is placed in a room with high humidity.

The unit should be positioned in such a way that there is no danger of noise nuisance in nearby rooms.

- Location of the unit on an internal wall requires sound insulation of the wall, interrupted studs and boards, and double plasterboard or a wall structure of similar quality. See Byggforsk Construction Detail Sheet 524.325 (Sound insulation properties for lightweight internal walls.) See the units installation instruction Figure 12 Wall construction page 15.
  If located on external walls, interrupted boards against adjacent rooms are recommended.

Check which regulations apply to your country when it comes to soundproofing.

- If the unit is located in a warm room where a lot of moisture is generated, condensation may form on the outside of the unit during periods when the outside temperature is low.

The base should be stable and level.

1.3. WHAT IS INCLUDED?

5x 

4x 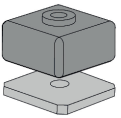

2. Installation

The unit can be installed in the following ways:

1. On the ceiling.
2. On the wall (mounting is available as an accessory)
3. Horizontally on the floor (absorption feet are available as an accessory or use damping blocks supplied with the ceiling suspension)
4. Vertically on the floor (absorption feet are available as an accessory or use damping blocks supplied with the ceiling suspension)

Nordic CL3 is available in both a right and a left version, depending on what best matches the duct location.

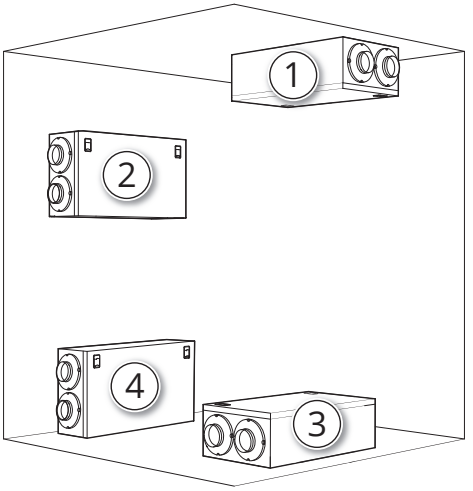

Figure 1 Location options

2.1. CEILING MOUNTING

2.1.1. Positioning requirements for ceiling mounting

Ceiling mounting must be carried out by qualified professional.

2.1.2. Space requirements for ceiling mounting

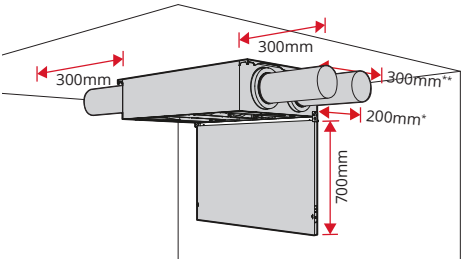

** space required for access to electrical bushings*
*** space required if a kitchen fan duct is to be connected*

Figure 2 Space requirements for ceiling mounting

2.2. HEAVY COMPONENTS

We recommend using a lift/manual lifting table for ceiling mounting. We also recommend wearing a hard hat.

Be aware that some of the unit's components are heavy.

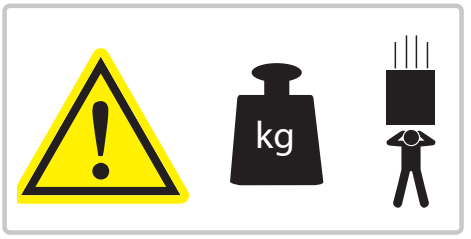



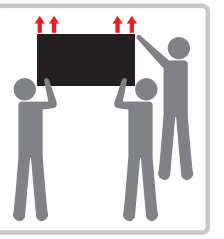

2.3. TOP MOUNTING

If it is necessary to pre-drill the mounting surface, see measures in Figure 3 Holes, top mounting for dimensions.
Select fixings that are suitable for the mounting surface.

The fixings must be suitable for the unit's weight of 59 kg.

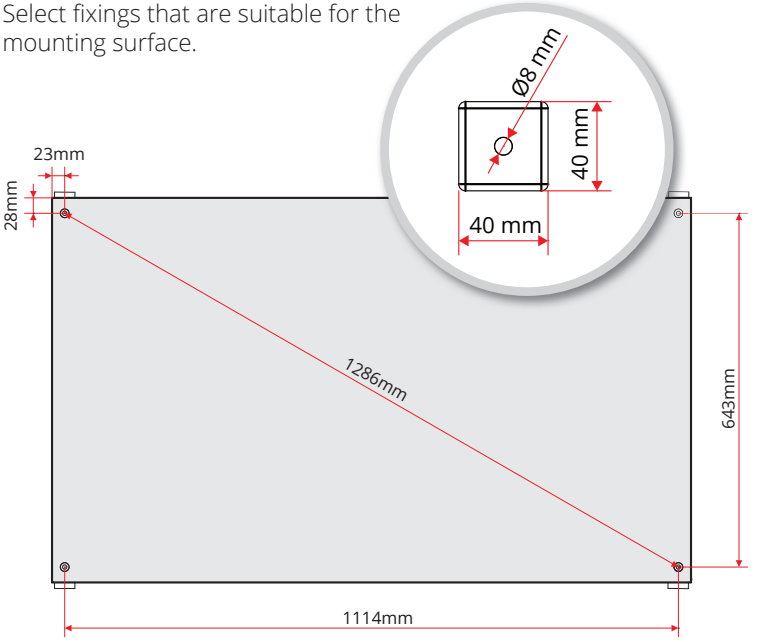

Figure 3 Holes, top mounting

Using suitable screws, screw through the holes in the mounting bracket, damping block and the unit's back panel.

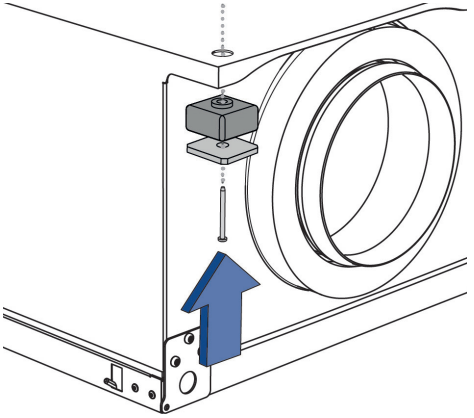

Figure 4 Mounting bracket, top mounting

The unit must always be mounted with at least a 3 mm gap to the mounting surface to prevent structure-borne sound (see figur 5).

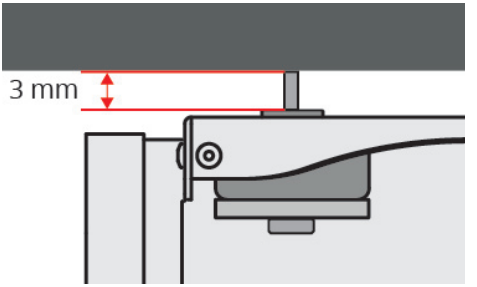

Figure 5 Gap to mounting surface

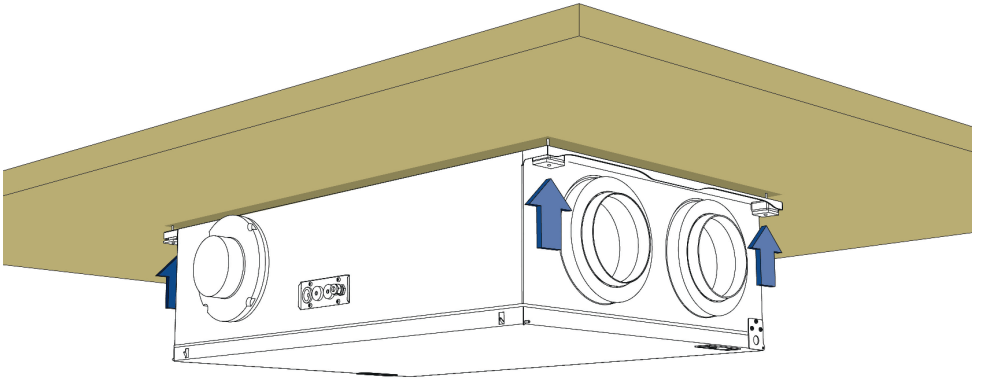

Figure 6 Top mounting

2.4. SIDE MOUNTING

If it is necessary to pre-drill the mounting surface, see measures in Figure 7 Holes, side mounting.
Select fixings that are suitable for the mounting surface.

The fixings must be suitable for the unit's weight of 59 kg.

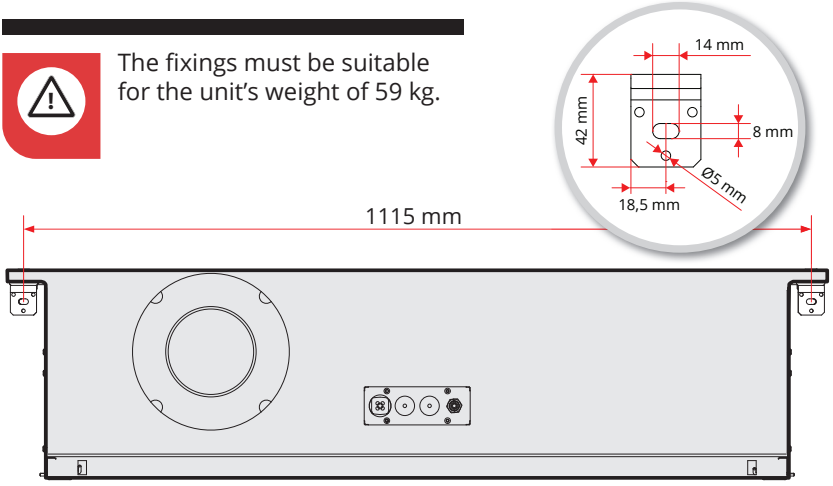

Figure 7 Holes, side mounting

The side bracket is an accessory and is not included in the unit's scope of delivery.
Sold separately as a spare part:
Art. nr: 117773

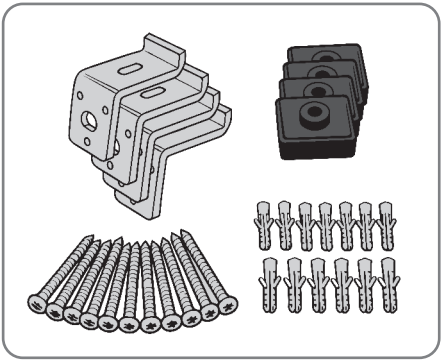

Use suitable screws and screw the unit firmly into space by securing the mounting brackets.

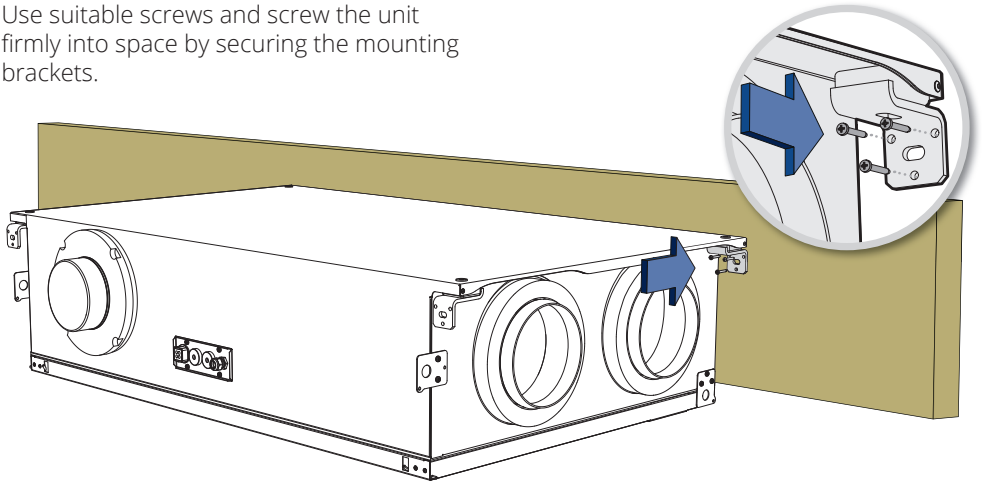

Figure 8 Side mounting

!

Make sure that the mounting surface only touches the mounting brackets and not the unit so as to prevent structure-borne sound.

The mounting bracket can be adjusted sideways in both directions to prevent touching with the unit, see Figure 9.

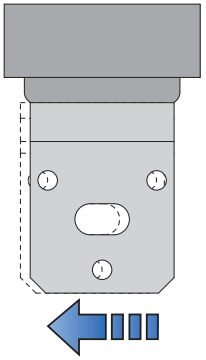

Figure 9

2.5. WALL MOUNTING

2.5.1. Positioning requirements for wall mounting

The unit should be positioned in such a way that there is no danger of noise nuisance in nearby rooms.

- If the unit is located on an internal wall, the wall should be soundproofed with, for example, rock wool to reduce sound transmission. Double plasterboard on the wall, interrupted studs and interrupted plasterboard are recommended.
  See Figure 10 Recommended wall construction.

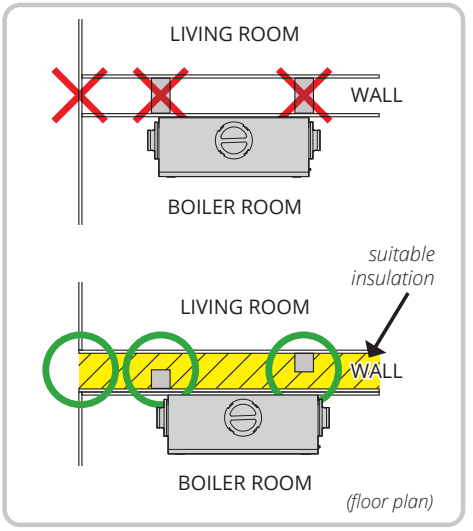

Figure 10 Recommended wall construction

The back panel of the unit has screw holes for attachment to the wall (accessories), both at the top and the bottom, so the unit can be mounted either way on the wall.

In that connection it may be desirable to turn the unit door. See the units installation instruction chap. 2.4.2. Turning the door page 16.

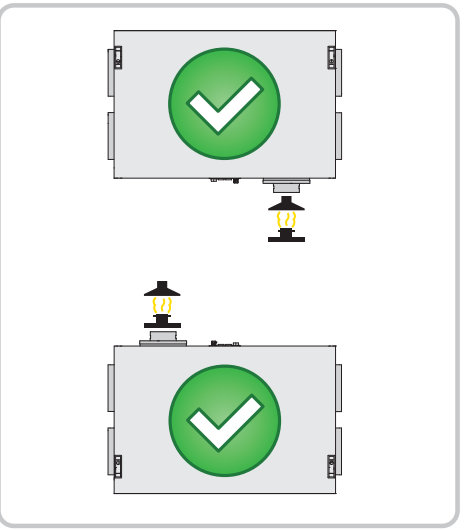

2.5.2. Removing the door

In order to remove the door, the locking washer must be removed

1. Use a knife or screwdriver and bend the locking washers from the locking bolts.
2. Slide both locking bolts in towards the centre of the door while...
3. lifting the door.

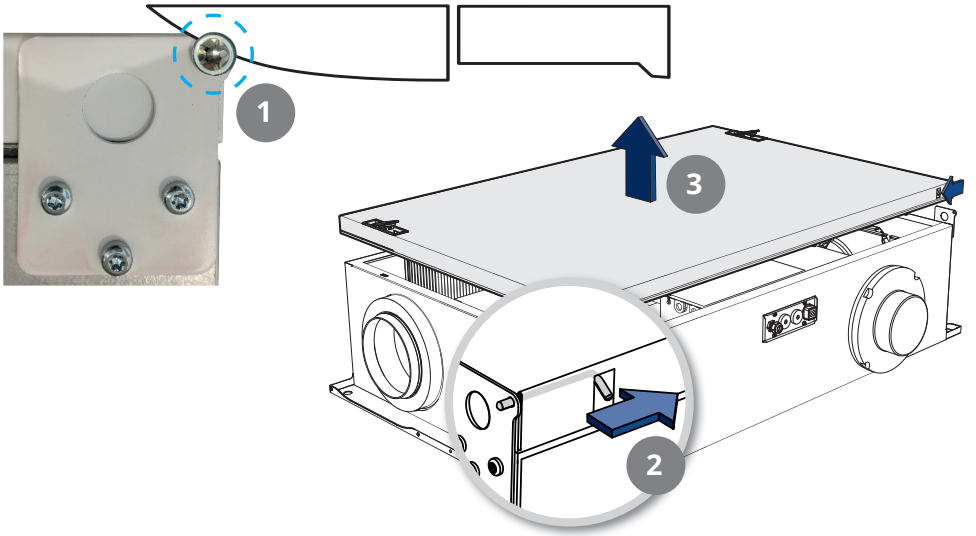

WARNING! After the door is put back in place, the locking plates must be slid back onto the lock bolts.

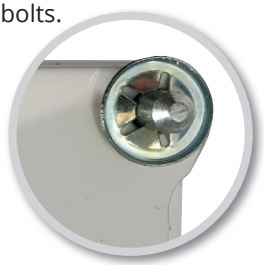

2.5.3. Space requirements for wall mounting

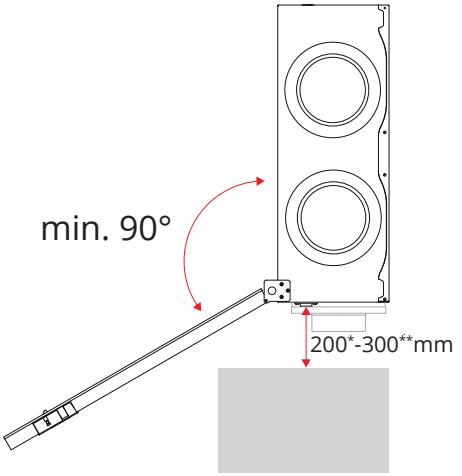

** space required for access to electrical bushings*
*** space required if a kitchen fan duct is to be connected*

Figure 11 Space requirements for ceiling mounting

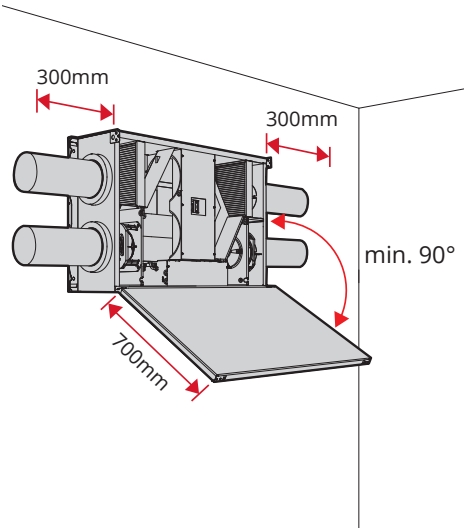

Figure 12 Space requirements for wall mounting

2.5.4. Fitting the wall bracket

In the case of wall mounting, secure the wall bracket to the wall and hang the unit in place (See Figure 13 Fitting the wall bracket). Hold the unit at an angle when hooking it onto the wall.

The top edge of the wall bracket should be mounted 55 mm higher than the top of the unit's back panel. If, for example, the top of the unit is to be 400 mm below the ceiling, the wall bracket should be mounted 345 mm from the ceiling, measured from the ceiling to the top edge of the wall bracket (Figure 14 Wall bracket).

The wall bracket is an accessory and does not come with the unit. See separate instructions (117784) for fitting the wall bracket.

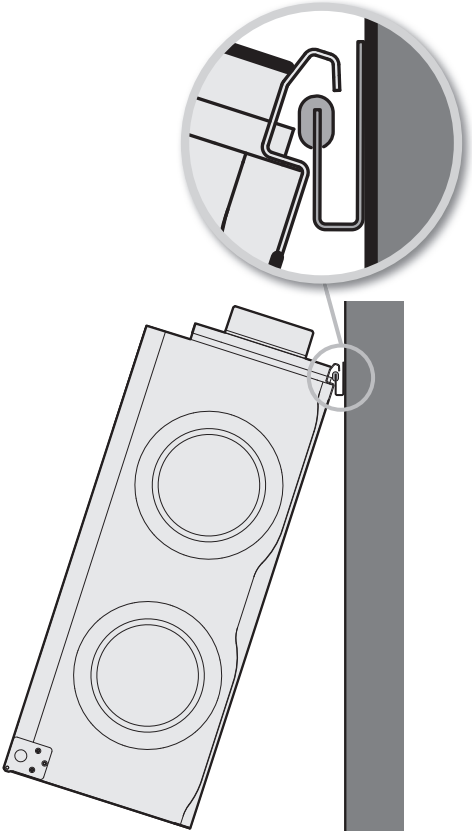

Figure 13 Fitting the wall bracket

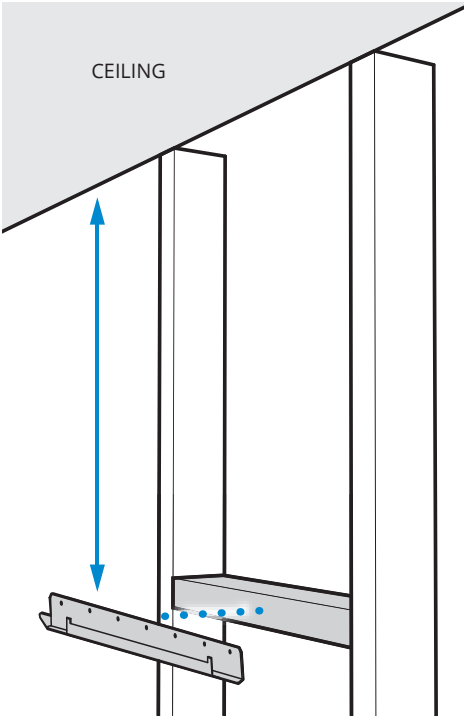

Figure 14 Wall bracket

2.6. FLOOR (LOFT) MOUNTING

2.6.1. Positioning requirements for horizontal floor mounting

When installing on the ceiling, absorption feet should be used, for the sake of noise and vibrations. Flexit offers suitable absorption feet as accessories, see **Figure 15 Absorption feet (accessory)**.

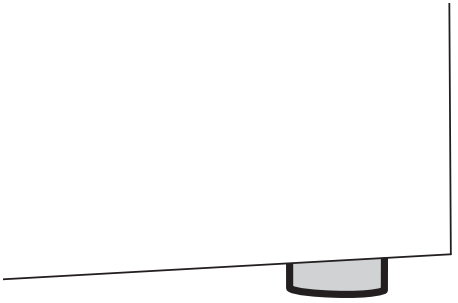

Figure 15 Absorption feet (accessory)

The absorption feet are an accessory and do not come with the unit.

2.6.2. Space requirements for horizontal floor mounting

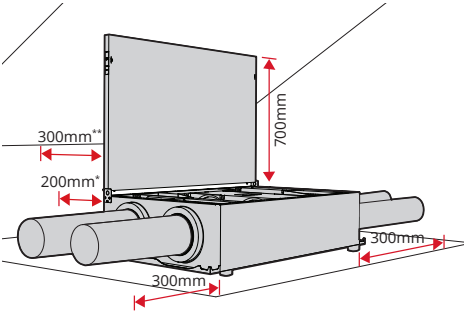

** space required for access to electrical bushings*
*** space required if a kitchen fan duct is to be connected*

Figure 16 Space requirements for horizontal floor mounting

2.6.3. Positioning requirements for vertical floor mounting

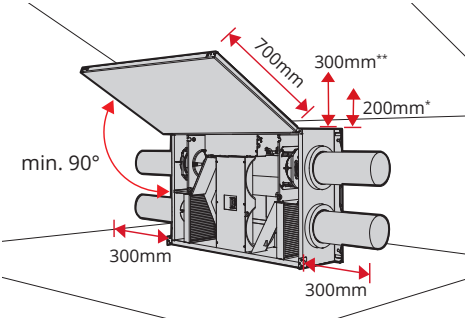

** space required for access to electrical bushings*
*** space required if a kitchen fan duct is to be connected*

Figure 17 Space requirements for vertical floor mounting

Suggested installation:

To avoid the unit tipping over when a door is closed, it should be attached with the enclosed fixing brackets.

Using suitable screws, screw through the holes in the fixing bracket, damping blocks, unit back panel and studs behind. Absorption material must also be used between the unit and the base. Flexit offers appropriate absorption feet as accessories. See Figure 15 Absorption feet (accessory) on page 15.

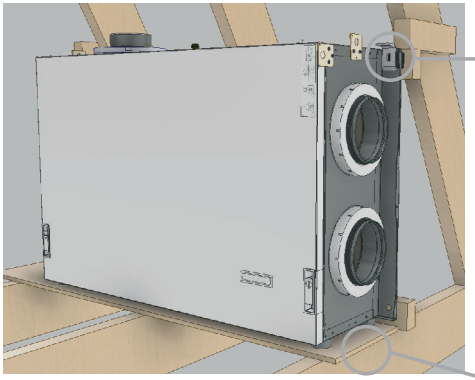



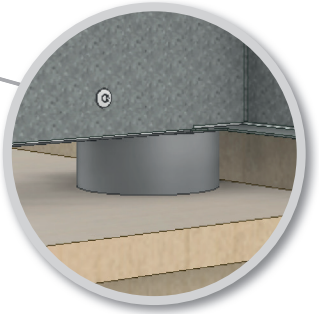

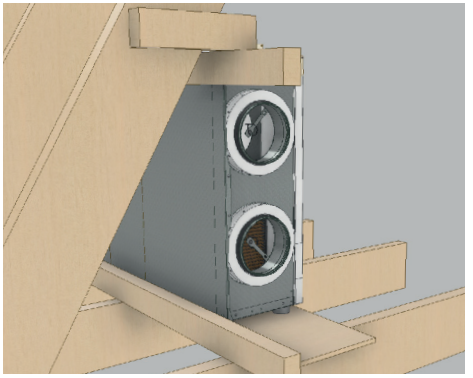

3. Electrical work



DANGER! All electrical work must be carried out by authorized personnel.



WARNING! The unit should be installed with an earth fault breaker. We recommend a separate circuit for the unit.

The unit is supplied with a 2 m cable with plug.
The cable exits at the top of the unit and is connected to a 230 V 50 Hz single-phase earthed power point that is placed in an easily accessible position close by.
The power plug should be used as the service switch.



Ensure that the plug for the unit is not boxed in.



Positioning must comply with individual countries' electrical safety legislation. Check which rules apply in your country.

4. Accessories



INFO! Also, refer to separate safety instructions for accessories such as the kitchen hood.

5. General drawing

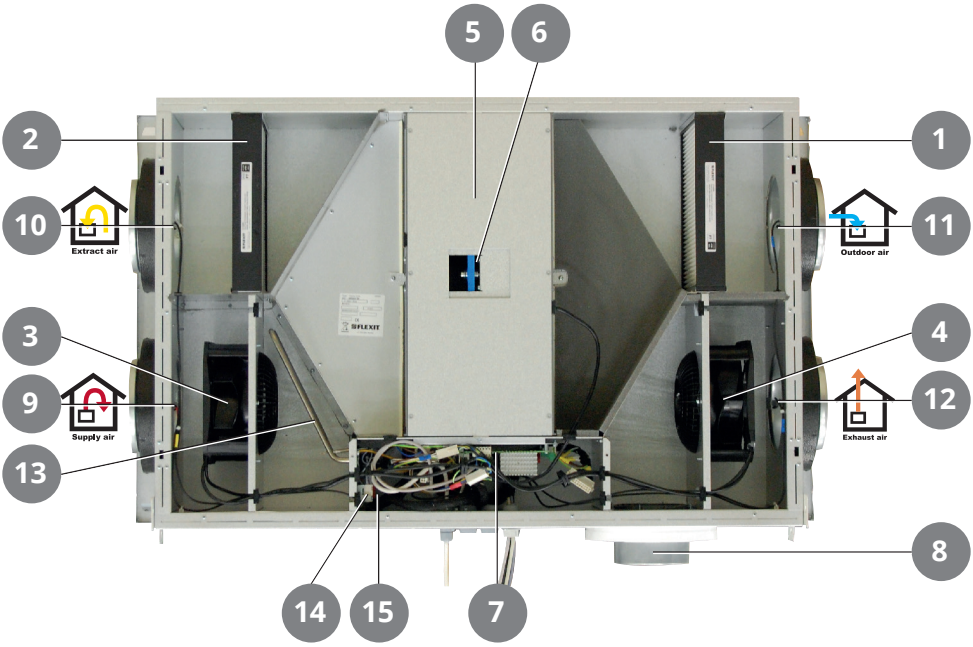

(Shown as a right model. The left model is a mirror image.)

No.	Abbreviation	Description
1	FI1	Supply air filter
2	FI2	Extract air filter
3	M1	Supply air fan
4	M2	Extract air fan
5	HR-R	Rotary wheel-type heat exchanger
6	M4	Rotor motor
7		Control unit
8	K	Kitchen fan connection
9	B1	Supply air temperature sensor
10	B3/H1	Extract air temperature and humidity sensor
11	B4	Outdoor air temperature sensor
12	B6	Exhaust air temperature sensor
13	EB	Heating battery
14	F10	Heating overheating thermostat man.
15	F20	Heating overheating thermostat auto

6. Cleaning and maintenance

Component	Action	Interval
Filter	Filters must be changed at least once a year. It is best to do this twice a year, before and after the pollen season. Check that the filter seal is completely tight. As standard, a maintenance reminder to change the filter will appear every 6 months.	6-12 months
Fans	The fan in a unit connected to a kitchen hood should be inspected once a year. For a fan in a unit that is not connected to a kitchen hood, inspection every three years is sufficient. The fans should be cleaned as needed.	12 months 3 years
Recovery system	Check that the surfaces are clean. Check that the sealing strips face in towards the rotary wheel-type heat exchanger. Check that the rotor belt is intact and not too slack.	3 years
Seals	Check that the seals on the door, under the filters, on the fan modules and on the rotor module are intact.	12 months
Valves	The supply air and extract air valves (for the bathroom, bedroom, laundry room, etc.) must be cleaned at least once a year.	12 months
Brush strips	Check that the brush strips are intact and sit tightly against the rotor. If they are worn, they can be moved to the next groove in the profile so that they are closer to the rotor.	3 years
Inside unit	A combination of a very low outside temperature and damp extract air can lead to the formation of ice. Normally this will not be a problem – when normal operating conditions return the ice crystals will be converted to steam and removed from the unit via the exhaust air. In the case of extreme cold over extended periods the unit should be checked for ice.	



Flexit participates in the ECP programme for RAHU. Check ongoing validity of certificate: www.eurovent-certification.com

The product is listed in the database for building products that can be used in **Nordic Swan Ecolabelled buildings.**

FLEXIT®

Flexit AS, Moseveien 8, N-1870 Ørje
www.flexit.com